Book No. 4053.

ELECTRICAL INSTRUMENTS

"Taylor" — "Cambridge"

SECTION I.

GALVANOMETERS, DUDDELL THERMO-GALVANOMETERS, GRASSOT FLUXMETER, DUDDELL MAGNETIC STANDARD, ETC.

THE
CAMBRIDGE
SCIENTIFIC INSTRUMENT COMPANY LTD.,
CAMBRIDGE, ENGLAND.

Gold Medal, International Inventions Exhibition, 1885.

Grand Prix, Paris Exhibition, 1900.

Two Grand Prizes, St Louis Exposition, 1904.

Two Grand Prizes, Milan Exhibition, 1906.

SECTION I.

GALVANOMETERS.

Manufactured by

THE CAMBRIDGE
SCIENTIFIC INSTRUMENT COMPANY, LTD.,
CAMBRIDGE, ENGLAND.

"Taylor" — "Cambridge"

CAMBRIDGE:
PRINTED AT THE UNIVERSITY PRESS

We also publish the following Catalogues and descriptive pamphlets which will be sent post free on application:—

Electrical Instruments. Section II. **Duddell Patent Oscillographs** (new edition in preparation).

Section III. **Resistances, Shunts, Bridges** etc. (in preparation).

Section IV. **Electrometers, Electroscopes, Standard Cells** etc.

Other sections will be published from time to time.

Physical Instruments, Book No. 4052.

Electrical Thermometry, Book No. 4000.

Microtomes and Accessories (new edition in preparation).

We shall be glad to send any of our apparatus to the Bureau of Standards, at Washington, for Standardization. A small charge will be made for the carriage of the instruments to and from the Bureau, but the actual verification fees will be charged at cost price.

Delivery. All prices quoted in this list are packed f.o.b. cars at port of entry in U.S.A., duty paid, and goods are sent freight forward at consignee's risk. The prices are also net 30 days from date of bill.

The greatest care is exercised in packing, but we cannot hold ourselves responsible for breakages in transit. In the event of any damage occurring, application should at once be made to the Express Company or carriers.

Previous lists are hereby cancelled. Designs, materials and prices are subject to alteration without notice.

PREFACE.

THIS section forms the first instalment of our new and revised Catalogue of Electrical Instruments. We have exercised a considerable amount of thought in reducing the number of Galvanometer types to a minimum. Many Galvanometers illustrated in text-books are almost obsolete from the point of view of the worker, and it is from his standpoint that this list has been prepared.

It is not an easy matter to select a galvanometer for any given piece of work, especially as in nearly every case the instrument has also to be used for general or class purposes. If clients will tell us their requirements we will endeavour to fulfil them as fully as possible, but it must always be borne in mind that the most suitable galvanometer is, at the best, only a compromise. If it has extremely high sensitivity, it is almost certain to have poor zero-keeping qualities, and these various qualities and failings have all to be considered before making a selection.

We would especially like to draw attention to the Duddell Thermo-ammeter (see p. 28) which as a pivoted and portable Thermo-galvanometer requiring a maximum power of only about 0·015 watt should find many important applications. It has already been found suitable for measuring the current in telephone lines and for use in a wave-meter in wireless telegraphy.

We would also draw attention to the String Galvanometer invented by Prof. Einthoven, and which we are making under licence from him.

Mr W. Duddell, with Prof. Einthoven's approval, has re-designed the instrument for us, and we venture to think that he has introduced some very real improvements. The electro-magnet yields a high flux without the necessity of water-cooling, and the movable chamber containing the fibre allows of the interchangeability of various fibres without the necessity of dismounting, and the corresponding risk of breakage when doing so.

The remaining sections of this Catalogue will be published as soon as possible; the following are the proposed sections:

Section II. Duddell Patent Oscillographs.
" III. Resistances, Shunts, Bridges etc.
" IV. Electrometers, Electroscopes, Standard Cells etc.

CONTENTS OF SECTION I.

CURVES OBTAINED WITH AN EINTHOVEN GALVANOMETER.

Diameter of Silvered Quartz fibre = 0·002 *mm.* (*See page* 18.)

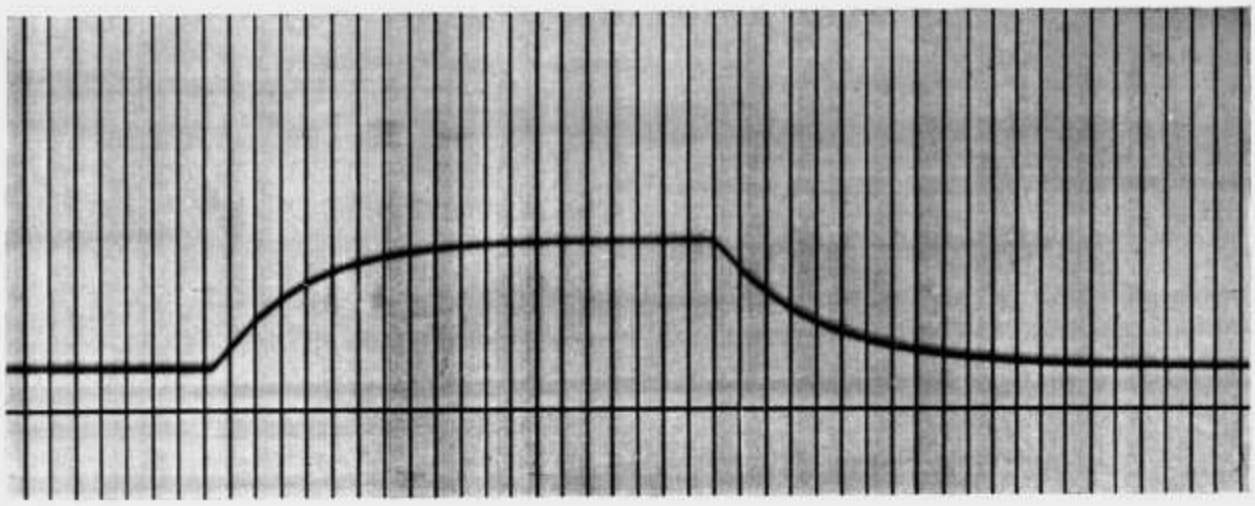

CURVE 1. "Make and Break" Curve of a current of $2{\cdot}7 \times 10^{-8}$ amperes. Time interval between cross lines 0·055 second. Slight tension on fibre.

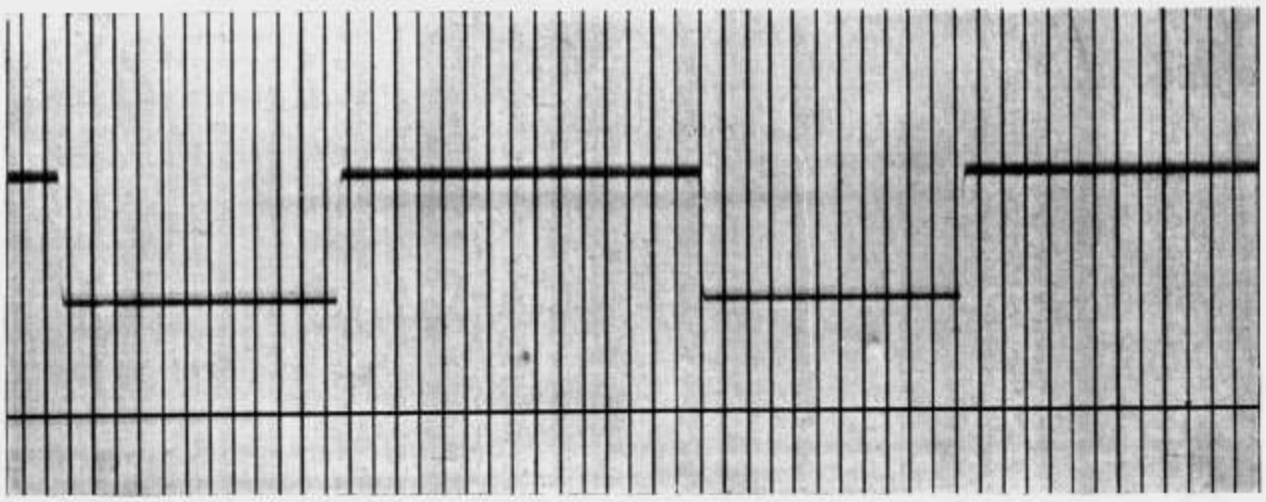

CURVE 2. "Make and Break" Curve of a current of $1{\cdot}3 \times 10^{-6}$ amperes. Time interval between cross lines 0·055 second. Tension on fibre increased. It will be noticed that the full deflection is attained in a much shorter time than in Curve 1.

"Taylor" — "Cambridge"

INTRODUCTORY REMARKS.

General. In order to compare the sensitiveness of different galvanometers several important facts must be known. Galvanometer sensitivities are stated in many ways and very often essential particulars are not given. Under these circumstances it is impossible to make a fair comparison of different types.

The most important data are as follows:—

(1) Period undamped*.

(2) Amount of damping.

(3) Zero keeping qualities.

(4) Resistance.

(5) Optical system.

(6) Astaticism, i.e., amount to which the readings of the instrument are affected by external magnetic fields.

(7) Sensitivity.

Period. The sensitiveness of a galvanometer is proportional to the square of its period (undamped) when the period is varied by altering the control. The sensitivity may therefore be greatly increased by increasing the length of the period. Generally speaking for "zero," or "null," methods a galvanometer with a fairly short period (between 5 and 10 seconds) is useful, as although the sensitivity is not so high as one having a longer period the spot returns quickly to zero, especially if there is considerable amount of damping. For ballistic work, a period of between 10 and 20 seconds† will be found useful.

Damping. For most work it will probably be found best to have the galvanometer very nearly aperiodic, i.e. the spot should not pass more than once or twice across its final position before coming to rest, for if it vibrates several times the possible rapidity of working will be reduced. For ballistic work however it is usual to work with a galvanometer practically undamped, but in many cases a damped galvanometer will be found convenient, as although the amplitude of the first

* Period here means the time taken for one *complete* oscillation. (On the Continent the time taken for a *single* oscillation is sometimes called the period.) If when the period is measured there is appreciable damping present, the ratio of the amplitude of successive swings of the galvanometer should be observed. This ratio is usually called the "proportional decrement" (or Damping Ratio), and its Napierian Logarithm is called the logarithmic decrement and is usually denoted by λ. Then

$$T_0 = T\left(1 + \frac{\lambda^2}{2\pi^2}\right) \text{ approx.},$$

where

T_0 = damped period,

T = undamped period,

λ = log. decrement;

as a Napierian logarithm = 2·303 × common logarithm, this expression simplifies to

$$T_0 = T\,(1 + 0{\cdot}269d^2),$$

where d = common logarithm of the damping ratio.

This correction may be neglected without introducing an error in the period of more than 1 % if the damping ratio is less than 1·5 approx.

† See "Galvanometers," W. E. Ayrton and T. Mather, *Phil. Mag.* Oct. 1898, pp. 373 to 379, where this point is very fully investigated.

swing is reduced* the sensitivity for most purposes is usually sufficient and the spot returns more quickly to rest, thus greatly increasing the possible rapidity of working. The galvanometer is also less sensitive to slight vibrations and this point may become very important when working in engine rooms, &c. As however its sensitivity varies with the amount of damping, it must be calibrated under the same conditions of damping as will occur in use.

Zero keeping qualities. These depend on the control used, the weaker the control, generally speaking, the more unstable the zero. In zero methods where the galvanometer is merely used as a detector, variations of zero are not of much importance, but if the galvanometer is to be used quantitatively a stable zero is essential. The control may therefore be made weaker for zero work with a subsequent gain in sensitivity provided the period does not become too long (see under "Period").

Resistance. The sensitivity of a galvanometer† for a given current is approximately proportional to the two-fifths power of its resistance and for a given P.D. applied to the terminals and inversely proportional to the three-fifths power of its resistance‡. Consequently the higher the resistance the more sensitive a galvanometer is for a given current, and the lower the resistance the more sensitive it is for a given P.D. at its terminals. The relation between these quantities may be seen at a glance from Figs. 1 and 1*a*. Generally speaking therefore, where small currents are to be measured (as in insulation testing), a high resistance galvanometer should be used, while for small P.D.s (as in potentiometer work with thermo-couples) a low resistance galvanometer would be found suitable.

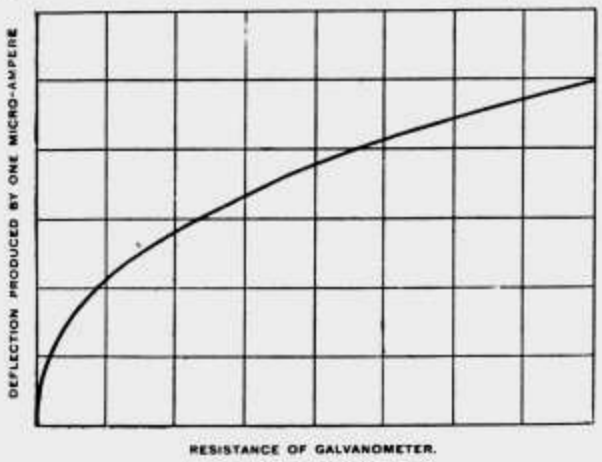

Fig. 1.

In which the rapid rise in sensitivity to current is shown with increase in resistance of the galvanometer.

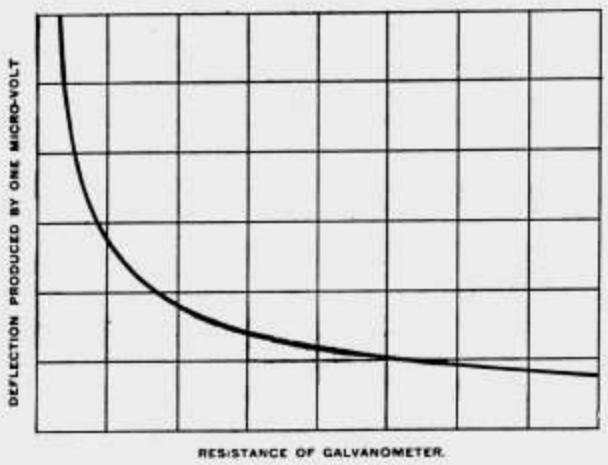

Fig. 1*a*.

Shows the great fall in sensitivity to P.D. with the increase in resistance of the galvanometer.

In the case of a moving coil instrument the resistance of the suspension strip may become important if the coil is of a low resistance, and in this case there is no advantage in reducing the resistance of the coil below a certain point. It should be remembered that for a given constant E.M.F. in circuit the copper resistance of the coil should if possible equal all the resistance of the external circuit including the suspension.

* $\theta = \theta_1\left(1 + \frac{\lambda}{2}\right)$ approx., where

θ_1 = damped throw,
θ = undamped throw,
λ = logarithmic decrement.

This may also be expressed in the form $\theta = \theta_1\left(\frac{\theta_1}{\theta_3}\right)^{\frac{1}{4}}$, where θ and θ_1 have the same values as before, and θ_1, θ_2, θ_3, etc. are angular deflections of the galvanometer. This second method gets rid of the logarithmic decrement "λ" altogether, and is consequently the easier to work out of the two. If the damping is small the formula may be still further simplified to

$$\theta = \theta_1 + \left(\frac{\theta_1 - \theta_3}{4}\right),$$

e.g. let θ_1, θ_2 and θ_3 be 100, 95 and 90·25 respectively, then by

first formula, $\theta = 102{\cdot}6$,
second ,, $\theta = 102{\cdot}7$,
third ,, $\theta = 102{\cdot}4$.

† For definition of "sensitivity" see p. 3.

‡ For rough estimates the square root of the resistance may be taken in both cases.

Optical System. It is almost unnecessary to point out that the sensitivity of a reflecting galvanometer depends ultimately on the optical system. It is sufficiently evident that a galvanometer whose "light spot" is good enough to permit of a reading being taken to 0·1 mm. is a more useful instrument than one five times as sensitive but whose spot can only be read to 1 mm. at the same scale distance. In comparing galvanometers therefore the area of the mirror should be taken into account. In all our galvanometers great care is taken to supply mirrors giving a well-defined spot.

Astaticism. It is important that a galvanometer should not be affected by external fields to any appreciable extent or its readings will be unreliable. Galvanometers which are so affected must be shielded by a soft iron case. This shielding has the drawback that it is then difficult to get at the galvanometer for adjustment, whilst the great increase in weight makes a strong support necessary. This is a serious drawback in cases where the whole galvanometer is suspended by wires or springs to prevent vibration.

Sensitivity. This has been expressed in a great variety of ways, but we think the most suitable is the current required to produce 1 mm. deflection on a scale placed 1 metre away from the galvanometer mirror. Scale distances greater than this are often used but in these cases it is easy to reduce the deflection to the standard distance when stating sensitivities, since the deflection is directly proportional to the scale distance. With a small galvanometer mirror, the increase in deflection gained by using a greater scale distance is usually more than counterbalanced by the greater optical errors introduced. Undoubtedly the modern tendency in galvanometer design is to decrease the size of the mirror in order to reduce the moment of inertia of the moving system, and for this reason it is probable that scale distances greater than one metre will be rarely used.

In stating the sensitivity of a galvanometer where no mirror is used and where the deflections of the moving system are observed through a microscope (as in the Einthoven String Galvanometer), the question arises, "To what scale distance does the magnification used correspond?" Professor Einthoven has suggested that the optical errors introduced in the two cases should form a basis for comparison, and that the scale distance to which a given magnification is equivalent should be the one which introduces equal optical errors, i.e. in which the accuracy of reading possible is the same. He has shown* that if this reasoning be admitted,

$$\frac{M}{N} = \frac{d}{r}, \text{ where } M = \text{magnification.}$$

N = numerical aperture of the objective used.
d = scale distance at which galvanometer mirror is used.
r = radius of the galvanometer mirror†.

The value of N for the best dry systems is about 0·95, so that a magnification of 950 would then be equivalent to a scale distance of 1 metre with a mirror of 1 mm. radius.

In the case of instruments which measure alternate currents a rather different method of expressing the sensitivity must be used, such instruments in nearly all cases measure the R.M.S. value of the current, consequently the deflections are not directly proportional to the current but to the square of the current. In this case we usually specify the sensitivity as the current required to produce a deflection of 250 mm. at a scale distance of 1 metre. This deflection admits of a reading being taken to at least one part in a thousand, and if we admit that a deflection of 0·1 mm. may be detected 1 cm. may be called the least *measurable* deflection. This will be produced by a current $\frac{1}{5}$ that for the standard deflection (of 250 mm.) while the minimum current detectable will be $\frac{1}{50}$ that of the standard deflection.

Factor of Merit. The subject of galvanometers in general has been very fully investigated by Messrs Ayrton and Mather in papers published in the *Phil. Mag.* for 1890, 1896 and 1898, in which they have pointed out that the sensitivity of a galvanometer for a given current is *inversely* proportional:

(*a*) to the square of its period (undamped) when the period is altered by altering the control;
(*b*) to the square root of its resistance, the coil volume being constant (or over wide ranges of resistance more nearly to two-fifths power of the resistance).

For a fair comparison of galvanometer sensitivities, therefore, these factors should be taken into

* W. Einthoven, "Ein Neues Galvanometer," *Annalen der Physik*, Vierte Folge, Band 12, 1903.
† This radius is half the diameter of the mirror, and is not the radius of curvature.

account and we have included a Factor of Merit on this basis amongst the data of the various galvanometers given in this Catalogue.

$$\text{Factor of Merit, } E = \frac{100 \times D}{T^2 (R)^{\frac{2}{3}}},$$

where T = Periodic time (undamped) in seconds,

R = Galvanometer resistance in ohms,

D = Deflection in mm. per micro-ampere at a scale distance of 1 metre.

The following papers bearing on galvanometers will be found of interest.

W. E. Ayrton, T. Mather and W. E. Sumpner, "Galvanometers," *Phil. Mag.*, Vol. xxx. p. 58, July 1890.

W. E. Ayrton and T. Mather, "Galvanometers," *Phil. Mag.*, Vol. xlvi. No. 281, Oct. 1898.

W. E. Ayrton and T. Mather, "Galvanometers," *Phil. Mag.*, Nov. 1896.

O. N. Stewart, "The Damped Ballistic Galvanometer," *Phys. Review*, 1903, p. 158.

R. Swyngedauw, E. Brylinski, Chaumat, "The Formula for the Damping Factor of a Ballistic Galvanometer," *Ind. Électr.* 15, pp. 373—377, Aug. 25, 1906.

H. A. Wilson, "The Theory of Moving Coil and other kinds of Ballistic Galvanometers," *Electrician*, p. 297, June 8, 1906.

Broca Galvanometer, *Comptes Rendus*, t. cxxvii. p. 101, séance du 13. 7. 96.

" " *Société française de physique*, Ann. 1896, séance du 17. 7. 96, p. 249.

W. Duddell, "Instruments for the measurement of large and small alternating currents," *Phil. Mag.*, July 1904.

(See also list of references to the Einthoven Galvanometer, p. 20.)

AYRTON-MATHER GALVANOMETER.

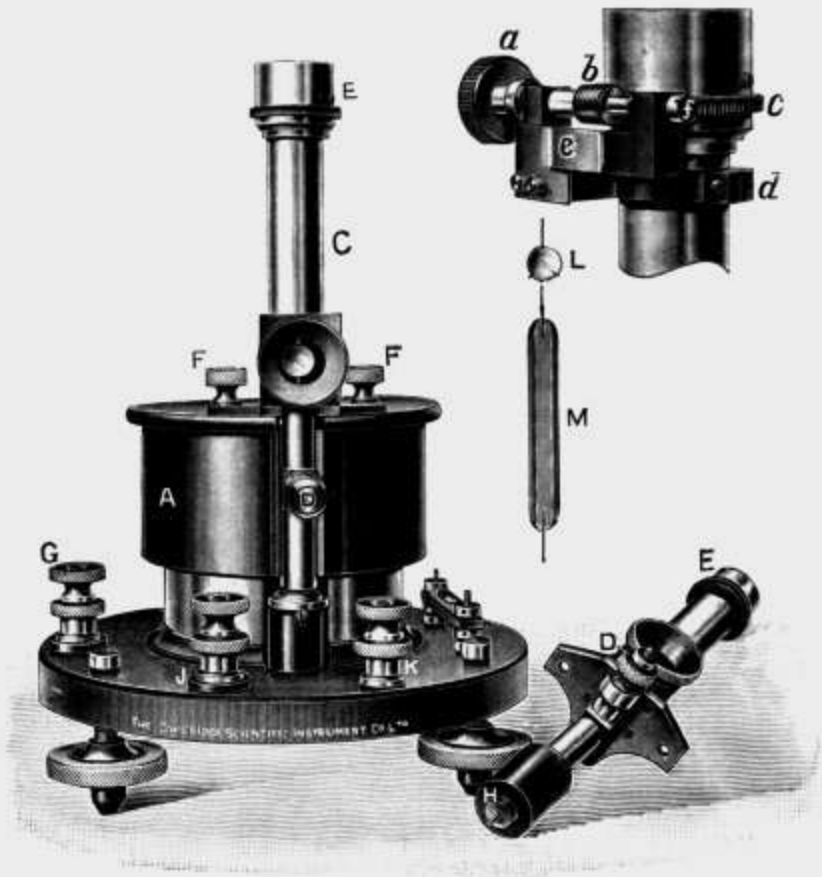

No. 2500. Fig. 2. Instrument, $\frac{1}{3}$ full size; Coil, $\frac{1}{2}$ full size; Torsion head, nearly full size.

General. This is a galvanometer of the well-known "moving coil" type, the coil and magnet being of the form found by Messrs Ayrton and Mather to give the greatest sensitivity for any given period*.

Description. The general appearance of the instrument is shown in Fig. 2. *A* is a powerful permanent magnet with a narrow air gap between the poles of which the coil is suspended. The coil and mirror are shown in detail at *M* and it will be seen that the coil is of a narrow shuttle-shaped form possessing a relatively small moment of inertia. It is wound with our special non-magnetic wire and after winding the whole coil the former is treated by a chemical process to eliminate any traces of magnetic material in the silk covering of the wire or the "former" on which it is wound. It has been found that very small traces of magnetism in the moving system materially reduce the sensitivity. The whole of the suspended system is enclosed in a dust-tight tube *C* which may be fixed in position in a few moments. By this means suspended systems of different resistance and period, etc., may be quickly interchanged. A tangent screw (as shown enlarged in the right-hand corner of Fig. 2) is fitted to the torsion head (*E*) if desired. The coil is firmly clamped for travelling by giving a turn clockwise to the milled head *D*. One terminal of the instrument is connected to frame to prevent electrostatic forces between the coil and frame. The levelling screws are fitted with ebonite insulating toes.

* See paper on "Galvanometers" by Ayrton and Mather, *Phil. Mag.* Vol. xxx. p. 58, July 1890.

Period. The galvanometer is usually arranged to give a period of about 8 seconds as this is found most convenient for general work. For ballistic work a suspension with a longer period may be fitted.

Damping. Each suspension tube is supplied with a suitable damping coil which may be attached to terminal *G* and this may be so connected that by depressing a key, it will be put in circuit with the galvanometer coil. Its resistance is adjusted so as to make the galvanometer movement very nearly aperiodic.

Zero-keeping qualities. For galvanometers to be used for zero methods, we fit a silver strip suspension, but for quantitative work a phosphor bronze strip gives a more stable zero. **Unless specified to the contrary a silver strip suspension will be supplied.**

Resistance. We supply coils of four resistances, viz.:

5, 20, 150 and 400 ohms.

Optical system. Every care is taken to make this as perfect as possible. Galvanometers are fitted with concave mirrors of 10 mm. diameter and 1 metre radius (for 1 metre scale distance) unless otherwise ordered. If required mirrors of 2 metres radius of curvature will be supplied or plane mirrors may be fitted for use with a telescope instead of a lamp.

Astaticism. As the moving coil is situated between the poles of a powerful permanent magnet the instrument is almost entirely unaffected by external magnetic fields.

Sensitivity. The following are the data of some Ayrton-Mather Galvanometers we have recently constructed.

Resistance of coil in ohms	Period of coil in seconds out of magnetic field	Deflection in mm. at 1 metre			1 mm. deflection at 1 metre produced by			Factor of Merit
		per micro-amp.	per micro-volt	per micro-coulomb	micro-amps.	micro-volts	micro-coulombs	
7	3·0	18	2·6	37	$5·6 \times 10^{-2}$	$3·9 \times 10^{-1}$	$2·7 \times 10^{-2}$	90
7	8·0	139	19·8	110	$7·2 \times 10^{-3}$	$5·0 \times 10^{-2}$	$9·1 \times 10^{-3}$	100
20	8·2	245	12·2	190	4×10^{-3}	$8·2 \times 10^{-2}$	$5·3 \times 10^{-3}$	110
20	3·5	53	2·6	100	$1·9 \times 10^{-2}$	$3·9 \times 10^{-1}$	$1·0 \times 10^{-2}$	130
146	7·8	540	3·7	435	$1·9 \times 10^{-3}$	$2·7 \times 10^{-1}$	$2·3 \times 10^{-3}$	123
400	8·3	757	1·9	590	$1·3 \times 10^{-3}$	$5·3 \times 10^{-1}$	$1·7 \times 10^{-3}$	100

Advantages. The principal advantages of the instrument are as follows:—

(1) *It is extremely sensitive.*

(2) *It is practically unaffected by external magnetic fields.*

(3) *Coils of different resistance, period, etc., may be quickly interchanged.*

(4) *As it is fitted with a large mirror* (10 *mm. diameter*) *a brilliant spot is obtained.*

INSTRUCTIONS FOR USE.

Position. The instrument should be set up on a solid support which is as free as possible from vibration. A slate slab let into a brick wall will generally be found satisfactory.

Levelling. The instrument should be levelled by means of the levelling screws on the base. When an instrument is sent out with the suspension tube in position the levels on the base are so set as to indicate the correct adjustment.

Clamping arrangement. The suspension should then be unclamped by giving the milled head *D* a turn counter-clockwise and the coil should then swing freely. The suspension should always be clamped before the instrument is moved from place to place.

Interchanging suspensions. To remove the suspension case unscrew the milled heads *FFF* and break the connection to the coil under the base of the instrument by unscrewing the small screw gripping the pin *H*. The suspension may then be removed and a fresh one screwed in place in a similar manner, taking the precaution to screw in the milled heads *FFF* before endeavouring to make the connection to the coil.

Damping coil. To use the damping coil connect an ordinary contact key, plug or switch between the terminal of the damping coil and the insulated terminal (*J*). Then when the key is depressed the damping coil will be put in shunt to the galvanometer, the movements of whose coil will then be rendered aperiodic. This arrangement will be found useful when the instrument is being used for ballistic work, for most other work it will generally be found best to select a coil which is sufficiently damped by the resistance of the external circuit to which it is connected.

PRICES.

Catalogue Number		$	Code Word
2500.	**Galvanometer complete with coil, having a resistance of 20 ohms. Silver gilt suspension, mirror working distance 100 cms., diameter 10 mm.**	**75.00**	*Macaw*
2501.	Do. do. with tangent head . .	**85.00**	*Lossless*
	Extra galvanometer coils, with suitable damping coils attached, having the resistances given below, are supplied in dust-tight suspension tubes ready for insertion in the galvanometer field. The suspension is silver gilt strip and the mirror, of 10 mm. diameter, has a working distance of 100 cms.		
2502.	Coil resistance about 5 ohms	**48.00**	*Milker*
2503.	Coil resistance about 20 ohms	**48.00**	*Lydian*
2504.	Coil resistance about 150 ohms	**50.00**	*Lynx*
2505.	Coil resistance about 400 ohms	**51.00**	*Lyrist*

LECTURE GALVANOMETER.

No. 2505. Fig. 3. $\frac{1}{5}$ full size.

General. This is of the moving coil type but is fitted with a very large mirror for projection purposes. The mirror is plane having an area of about 8 square cms. and is mounted on the coil former itself. The instrument has been found particularly useful for projecting the image of a Nernst lamp filaments on a screen and in this way the movements of the galvanometer can be exhibited to a large audience. We use some of these instruments with a lamp and scale in our own test room as owing to the large amount of light reflected by the mirror it is not necessary to darken the room. As the whole of the instrument is open to inspection it is specially adapted for teaching the principles of the moving coil galvanometer.

Description. The general appearance of the instrument is shown in Fig. 4, although the design has been modified since the illustration was made. A rectangular coil moves between the poles of a powerful permanent magnet, a soft iron core being supported in the centre of the coil. As previously mentioned the mirror is mounted on the face of the coil. A simple torsion head is fitted adjustable from the exterior of the case. The latter is a teak case fitted with a large plate glass window.

Period. The galvanometer is usually arranged to give a period of about 5 seconds.

Damping. When the external circuit to which the galvanometer is connected has a low resistance (below about 40 ohms) the instrument is dead beat. If a higher resistance than this is being used the galvanometer should be shunted if a dead beat movement is necessary.

Zero-keeping qualities. A stable zero is obtained, a stout phosphor bronze suspension being employed.

Resistance. About 10 ohms.

Optical system. Plane mirror, 4·3 cms. × 1·8 cms. Area = 8·1 sq. cms.

Astaticism. As the moving coil is situated between the poles of a powerful permanent magnet the instrument is almost entirely unaffected by external magnetic fields.

Sensitivity. The following are the data of some Lecture Galvanometers we have recently constructed:

Resistance of coil in ohms	Period of coil in seconds out of magnetic field	Deflection in mm. at 1 metre			1 mm. deflection at 1 metre produced by			Factor of Merit
		per micro-amp.	per micro-volt	per micro-coulomb	micro-amps.	micro-volts	micro-coulombs	
10·7	6	12·6	1·2	13	$7{\cdot}9 \times 10^{-2}$	$8{\cdot}3 \times 10^{-1}$	$7{\cdot}7 \times 10^{-2}$	14
8·5	6	10·7	1·3	11	$9{\cdot}3 \times 10^{-2}$	$7{\cdot}7 \times 10^{-1}$	$9{\cdot}1 \times 10^{-2}$	13

Advantages. The principle advantages of the instrument are:

(1) *It has an exceptionally large mirror so that when used with a Nernst lamp the "spot" is visible in daylight.*

(2) *All parts are easily accessible and can be readily inspected by students.*

(3) *The construction is simple and durable.*

INSTRUCTIONS FOR USE.

Position. The instruments should preferably be set up on a solid support which is free from vibration. A slate slab let into a brick wall will generally be found satisfactory.

Clamping Arrangement. The suspension should then be unclamped by moving down the spring handle which is seen in the front of the instrument.

Levelling. The instrument should be levelled by means of the levelling screws on the base so that the coils swing freely. This may be readily tested by opening the glass door of the case and blowing on the coil, when the resulting vibrations should die away slowly.

PRICES.

Catalogue Number		$	Code Word
2510.	**Lecture galvanometer, complete with coil, having a resistance of about 10 ohms; Phosphor-bronze suspension and plane mirror 4·3 cms. × 1·8 cms. (see Fig. 3)**	**82.00**	*Maceale*

BROCA GALVANOMETER.

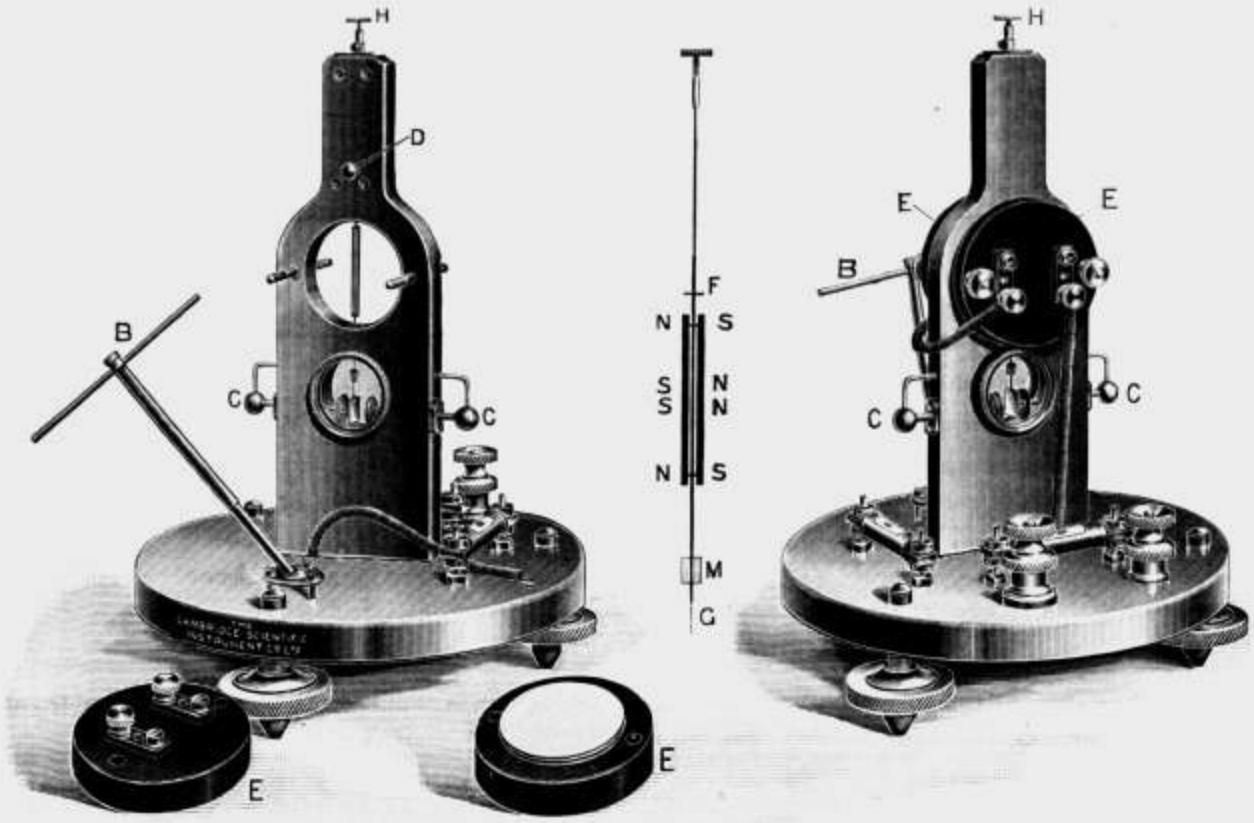

No. 2515. Fig. 4. Instrument, $\frac{1}{3}$ full size; moving system, $\frac{1}{2}$ full size.

General. This galvanometer is of the "moving vertical magnet" type, first suggested by Prof. Andrew Gray, F.R.S.*, and then modified by Prof. Broca† of the École Polytechnique, Paris, by the addition of the consequent poles in the centre of the magnets. The instrument has been further developed in this country chiefly by Dr Harker of the National Physical Laboratory.

Description. The general appearance of the instrument is shown in Fig. 4. The distinctive feature of this form of galvanometer is in the moving system (see figure). The magnets consist of two steel wires placed vertically and each so magnetised that its two ends are of like polarity with a consequent pole in the middle. This form makes it possible to use comparatively powerful magnets while the moment of inertia of the suspended systems is kept small; and at the same time the arrangement is very astatic. The whole system is suspended by a fine quartz fibre. The controlling force is supplied in a small degree by this fibre but principally by the controlling magnet *B* at the back of the instrument. The faces of the ebonite coil boxes (*EE*) are completely covered by a thin metallic shield, while the frame being of metal, the suspended system is completely shielded from electrostatic forces. In order to prevent a large potential difference existing between the metal frame and the coils one terminal is connected to frame and so brought to the same potential as the magnet system by means of the clamping device. The levelling screws are fitted with ebonite insulating toes.

Period. This may be varied from about 5 to 20 seconds by adjusting the control magnet.

Damping. This is also adjustable. A light aluminium damping vane (*G*) is attached to the lower end of the suspended system, stationary damping plates being fitted on each side of it. To increase the damping it is only necessary to push these plates closer together by means of the knobs *CC*, and so reduce the size of the chamber within which the vane moves.

Zero-keeping qualities. The suspension being of quartz a very stable zero is obtained.

* On a New Reflecting Galvanometer of Great Sensibility and on New Forms of Astatic Galvanometers. T. Gray and A. Gray, *Proc. Roy. Soc.* Vol. 36, pp. 287—296.

† *Comptes Rendus*: Académie des Sciences, t. CXXVII. p. 101, séance du 13. 7. 1896, Société française de physique, Ann. 1896, séance du 17. 7. 1896, p. 249

Resistance. We supply pairs of coils of three resistances, viz., about 10,100 and 1000 ohms per pair when connected in series. By connecting each pair of coils in parallel additional resistances of 2·5, 25 and 250 ohms may be obtained.

Optical System. Every care is taken to make this as perfect as possible. The instrument is fitted with a plane mirror (4 × 5 mm.) and convex lens of 1 metre radius (for 1 metre scale distance) unless otherwise ordered. If required lenses of 2 metres radius will be supplied or plane glass may be substituted for the lens for use with a telescope instead of a lamp. In this case it will be necessary to use a brilliantly illuminated scale owing to the small size of the mirror.

Astaticism. Great care is taken to make the moving system as astatic as possible and we consider this galvanometer much superior to the ordinary "moving magnet" instrument in this respect.

Sensitivity. The following are the sensitivities of some Broca Galvanometers we have recently constructed :—

Resistance of coils in series in ohms	Period in seconds	Deflection in mm. at 1 metre			1 mm. deflection at 1 metre produced by			Factor of Merit
		per micro-amp.	per micro-volt	per micro-coulomb	micro-amps.	micro-volts	micro-coulombs	
8·8	10	350	40	220	$2·9 \times 10^{-3}$	$2·5 \times 10^{-2}$	$4·6 \times 10^{-3}$	147
8·8	17·3	1070	121	380	$9·3 \times 10^{-4}$	$8·3 \times 10^{-3}$	$2·6 \times 10^{-3}$	150
110	10	1000	9·1	630	$1·0 \times 10^{-3}$	$1·1 \times 10^{-1}$	$1·6 \times 10^{-3}$	153
110	17·3	3000	27·3	1100	$3·3 \times 10^{-4}$	$3·7 \times 10^{-2}$	$9·1 \times 10^{-4}$	159
860	10	2200	2·6	1400	$4·5 \times 10^{-4}$	$3·8 \times 10^{-1}$	$7·2 \times 10^{-4}$	148
860	17·3	6500	7·5	2400	$1·5 \times 10^{-4}$	$1·3 \times 10^{-1}$	$4·1 \times 10^{-4}$	146

Advantages. The principal advantages of the instrument are as follows:—

(1) *It is extremely sensitive.*

(2) *The period can be readily varied by means of the control magnet.*

(3) *The damping can be easily varied by means of the damping plates and is independent of the resistance in the external circuit.*

(4) *Coil boxes of different resistances may be quickly interchanged and the resistance of the instrument may also be varied by connecting the coils in series or parallel.*

INSTRUCTIONS FOR USE.

Position. The instrument should be set up on a solid support which is as free as possible from vibration. A slate slab let into a brick wall will generally be found satisfactory.

Levelling. The instrument should be levelled by means of the levelling screws on the base. When an instrument is sent out from the works the levels on the base are so set as to indicate the correct adjustment.

Clamping Arrangement. To unclamp the moving system the damping plates should be withdrawn by pulling out the knobs *CC*, Fig. 4, and the small knob *D* controlling the clamp gently pressed down. The system should now swing free. To bring the needle to zero the directing magnet *B* should be used. By its means also the period can be adjusted to suit the requirements of the operator.

Period. To obtain a long period it will generally be found best to proceed as follows. First set the control magnet fairly close to the instrument, so as to get a quick period. This is quite easy. Then gently pull the control magnet away, at the same time counteracting the tendency of the spot of light to swing off the scale by slightly moving the control magnet.

PRICES.

Catalogue Number		$	Code Word
2515.	**Broca Galvanometer, complete, as illustrated in Fig. 4. Resistance of coils in series 100 ohms**	**75.00**	*Madness*
2516.	Extra coils—resistance of pair in series 10 ohms, per pair	**14.00**	*Madrigal*
2517.	Extra coils—resistance of pair in series 1000 ohms, per pair	**16.00**	*Magian*

THOMSON GALVANOMETER.

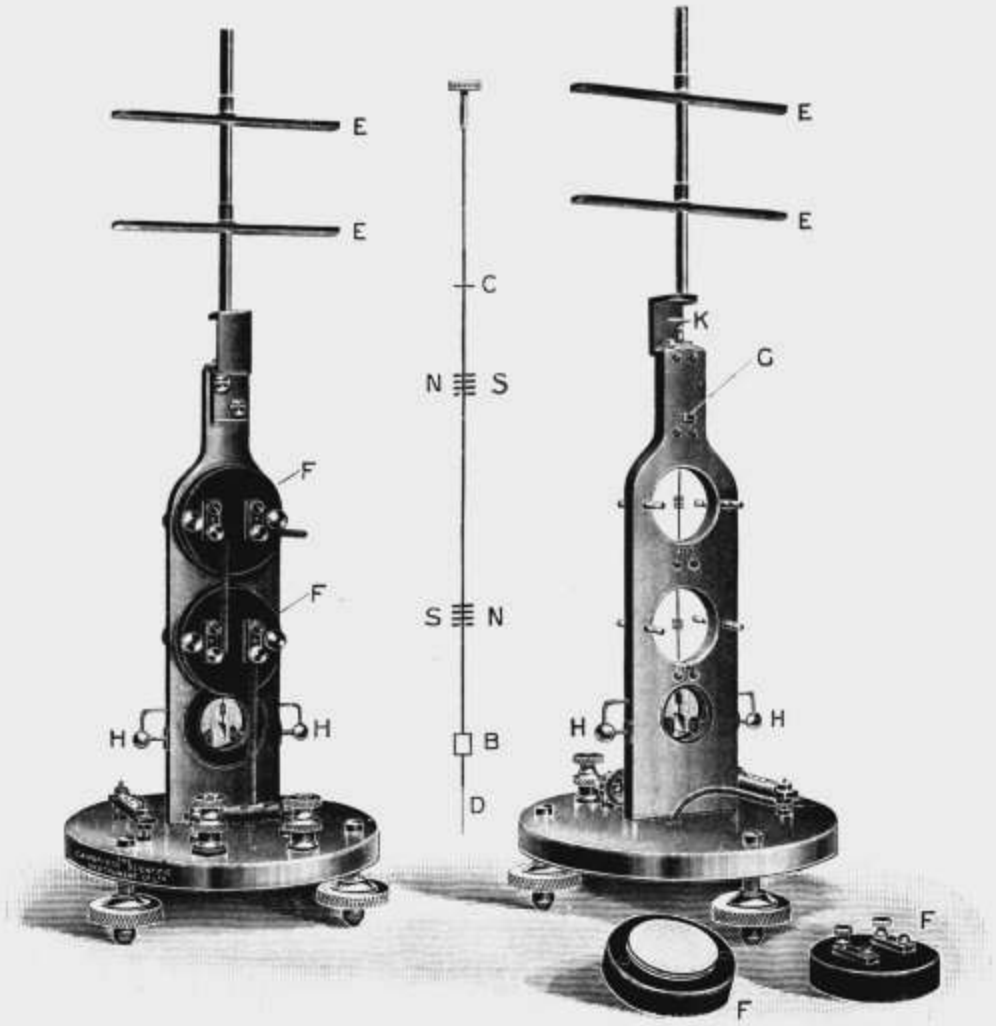

No. 2525. Fig. 5. $\frac{1}{6}$ full size. Suspension, $\frac{1}{2}$ full size.

General. This type of galvanometer is now so well known that only a brief description is necessary.

Description. The general appearance of the instrument is shown in Fig. 5, together with a diagram of the moving system which will be seen to consist of two groups of four magnets each, the whole being suspended by a fine quartz fibre. The controlling force is supplied in a small degree by this fibre but principally by the control magnets *EE* mounted on the top of the instrument. The faces of the ebonite coil boxes (*FFFF*) are completely covered by thin metallic shields, and the frame being of metal, the suspended system is completely shielded from electrostatic forces. In order to prevent a large potential difference existing between the metal frame and the coils one terminal is connected to frame, while the levelling screws are fitted with ebonite insulating toes.

Period. This may be readily varied from about 5 to 20 seconds by adjusting the control magnets (*EE*).

Damping. This is also adjustable. A light aluminium damping vane *D* is attached to the suspended system, a flat brass damping plate being fitted on each side of it. To increase the damping it is only necessary to push these plates closer together by means of the knobs *HH* and so reduce the size of the chamber within which the vane moves.

Zero-keeping qualities. The suspension being of quartz a very stable zero is obtained.

Resistance. We supply sets of four coils of three resistances, viz. 20, 200 and 2000 ohms; by connecting each pair of coils in parallel additional resistances of 5, 50 and 500 ohms may be obtained; or by connecting all four coils in parallel resistances of 2·5, 25 and 250 ohms.

Optical System. Every care is taken to make this as perfect as possible. The instrument is fitted with a plane mirror (4 × 5 mm.) and convex lens of 1 metre radius (for 1 metre scale distance), unless otherwise ordered. If required, lenses of 2 metres radius will be supplied, or plane glass may be substituted for the lens for use with a telescope instead of a lamp. In this case it will be necessary to use a brilliantly illuminated scale owing to the small size of the mirror.

Astaticism. Instruments of this type are usually described as "astatic," but they are not so good in this respect as the Broca Galvanometer, and if used where there are varying stray fields of appreciable strength a soft iron shield will probably be required (more especially if the control magnets are adjusted to give a long period).

Sensitivity. We give below the sensitivity of a Thomson Galvanometer as recently constructed by us:—

Resistance of coils in series in ohms	Period in seconds	Deflection in mm. at 1 metre			1 mm. deflection at 1 metre produced by			Factor of Merit
		per micro-amp.	per micro-volt	per micro-coulomb	micro-amp.	micro-volt	micro-coulomb	
10	15	565	56·5	236	$1·77 \times 10^{-3}$	$1·77 \times 10^{-2}$	$4·23 \times 10^{-3}$	100

Advantages. The principal advantages of the instrument are as follows:—

(1) *It is extremely sensitive.*

(2) *The period can be readily varied by means of the control magnet.*

(3) *The damping can be easily varied by means of the damping plates and is independent of the resistance in the external circuit.*

(4) *Coil boxes of different resistances may be quickly interchanged and the resistance of the instrument may also be varied by connecting the coils in series or parallel.*

INSTRUCTIONS FOR USE.

Position. The instrument should be set up on a solid support which is as free as possible from vibration. A slate slab let into a brick wall will generally be found satisfactory.

Levelling. The instrument should be levelled by means of the levelling screws on the base.

Clamping Arrangement. To unclamp the moving system the damping plates should be withdrawn by pulling out the knobs *HH* and the small knob *G* controlling the clamp gently pressed down. The system should now swing free. To bring the needle to zero, the directing magnets *EE* should be used. By their means also the period can be adjusted to suit the requirements of the operator.

PRICES.

Catalogue Number		$	Code Word
2525.	**Thomson Galvanometer, complete, as illustrated in Fig. 5. Resistance of four coils in series about 200 ohms**	**114.00**	*Magistral*
2526.	Extra coils—resistance of four coils in series about 20 ohms	**28.00**	*Magpie*
2527.	Extra coils—resistance of four coils in series about 2000 ohms	**32.00**	*Maidenly*

THE EINTHOVEN STRING GALVANOMETER.

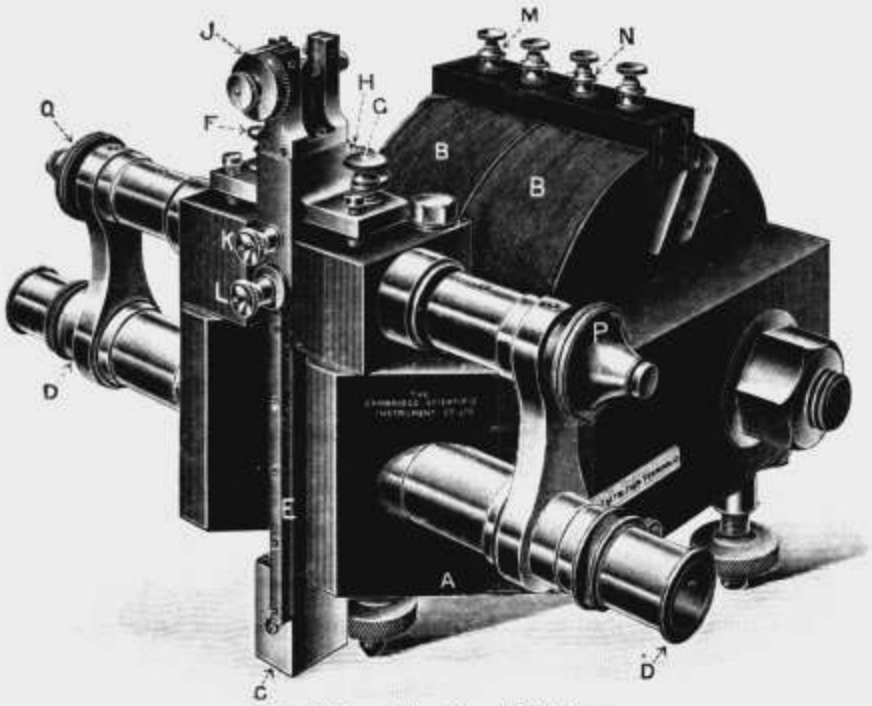

No. 2535. Fig. 6. ¼ full size.

General. This galvanometer has been developed by Prof. Einthoven of the University of Leyden, who has authorized us to manufacture it. The detailed designs for the instrument have been made for us by Mr W. Duddell, F.R.S. It is essentially of the "moving coil" type, the coil being reduced to a single "string" or fine wire stretched in a very narrow air gap between the poles of a powerful electromagnet. The arrangement is shown diagrammatically in Fig. 7. When a current passes through the string *CC*, it is deflected in the direction of the arrow *a*, i.e. at right angles to the magnetic field *NS*. This small movement is observed by means of a microscope *A* passing through a hole bored in the pole shoes, or by throwing an enlarged image of the wire on to a screen by means of an arc lamp and projection lantern. The instrument is extremely sensitive, very dead beat, has a very short period and is practically without self-induction or capacity. Used in conjunction with a photographic recording apparatus it will record alternating or pulsating currents of very small magnitude, or their variations may be observed visually in a rotating mirror. The instrument is also extremely valuable in physiological investigations and was in fact developed by Prof. Einthoven mainly for this purpose.

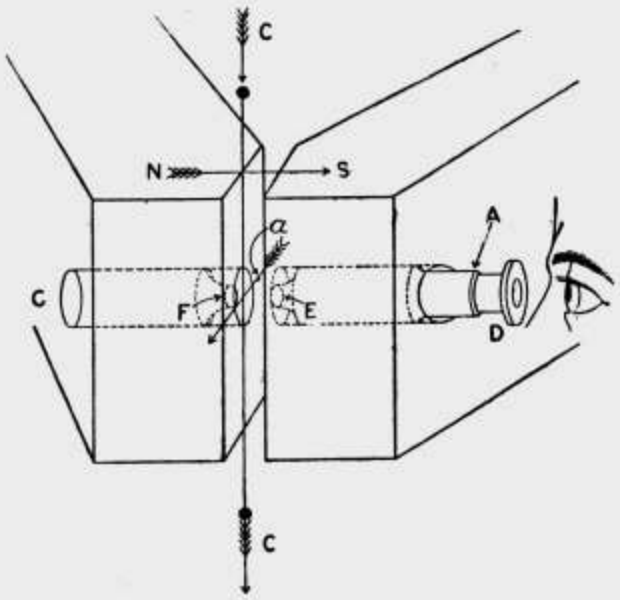

Fig. 7. Diagrammatic View of Einthoven Galvanometer.

Theory. It has been shown in the last paragraph on page 3 that it is possible to calculate a "Factor of Merit" (E) which shall give a fair idea of the relative behaviour of different galvanometers.

Prof. Einthoven has investigated the effect of varying the size of coil, number of turns, etc., on this "Factor of Merit" in order to find the conditions under which E becomes a maximum. He has shown that E is *inversely* proportional,

(*a*) to the square root of the number of turns, the size of the wire being kept constant,

(*b*) to the diameter of the wire, the number of turns being kept constant.

It is evident therefore that the best results will be obtained by reducing the number of turns and size of wire, and therefore the weight and moment of inertia of the coil to a minimum, but this, of course, will only be of advantage so long as the moment of inertia of the mirror may be ignored. The mirror may, however, be entirely dispensed with and the movement of the coil be directly observed by means of a microscope.

Finally, it is but a short step from the single turn of very fine wire to the stretched "string." In addition, the sensitivity may, of course, be increased by increasing the strength of the field, i.e. by using a powerful electromagnet. The Einthoven String Galvanometer is therefore the direct result of the practical application of the foregoing theory. For fuller details of the theory of the instrument the original papers should be consulted. (See page 20.)

Description of Instrument. The general appearance of the instrument is shown in Fig. 6. A is the electromagnet which is excited by the field coils BB. C is the "vibrator case," containing the stretched "string," while DD is the microscope which passes through a hole bored in the magnet pole-pieces. The electromagnet core is extremely massive and the pole pieces are shaped so as to give an exceedingly high flux density in the narrow air gap at E. The field coils BB are usually wound in two sections, the ends being brought out to terminals on the top of the instrument, so that they can be connected in series or parallel as desired. The magnetic circuit being fully saturated small variations in the exciting current do not affect the flux density in the gap. The vibrator case containing the stretched "string" is shown diagrammatically in Fig. 8. E is

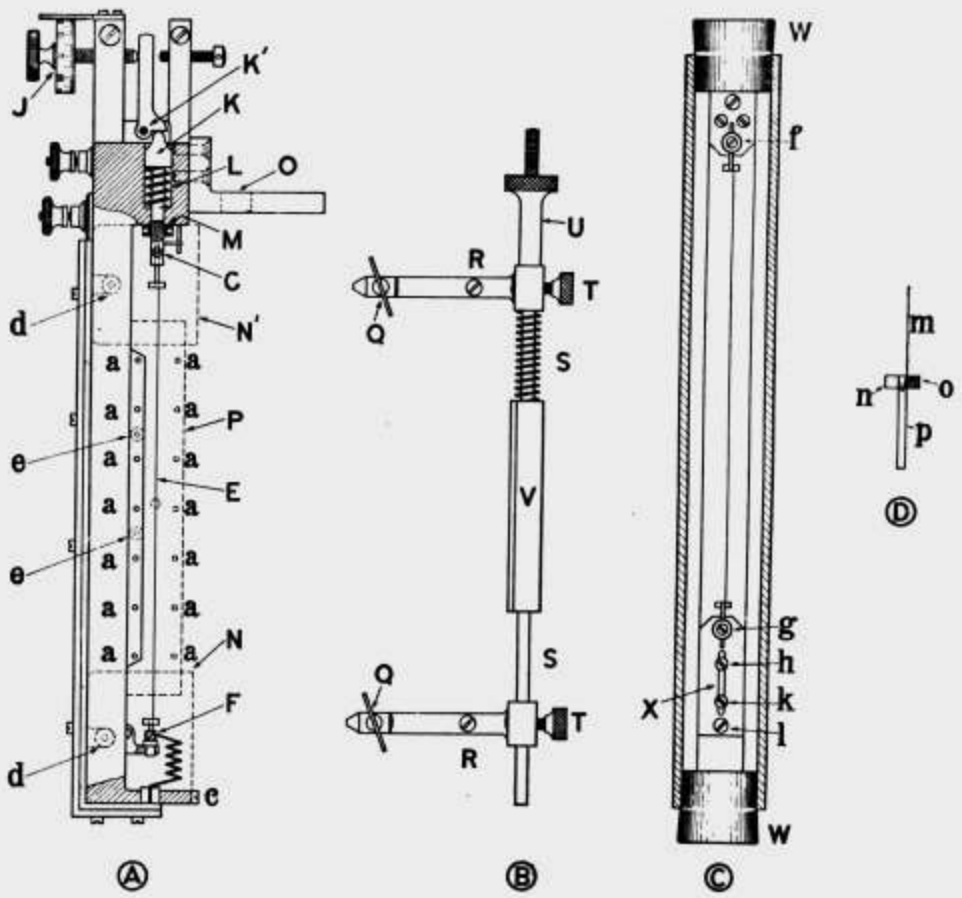

Fig. 8. Section through Vibrator, Fibre holder, etc.

the "string" which in the most sensitive instruments consists of a very fine quartz fibre (about 0·002 mm. diameter) coated with silver. This fibre is soldered at each end to T-shaped plates which are held in position by set screws at *FG*. The reason quartz is used is that up to the present no metallic wire of sufficiently small diameter is available. The tension of the fibre may be adjusted by means of the micrometer screw *J* which presses against the bell crank lever *K''* which in its turn presses against the piston *K* to which one end of the fibre is fixed. The piston is pressed upwards by the spring *L* so by this means a very fine adjustment of the fibre can be obtained without any backlash. A small adjustable collar *M* is fitted which when properly adjusted makes it practically impossible to break the fibre by putting on too much tension. The movements of the fibre are observed at its mid-point (i.e. where the deflections are a maximum) through a mica window (shown dotted). The whole of the vibrator case is supported in the field on three points (Fig. 6). By adjusting the screw *H* the whole case rocks on two points and by this means its position in the field and the alignment of the mica window and the microscope objective may be readily adjusted.

Period. This depends entirely on the tension of the fibre which is adjusted by means of the micrometer screw *J* (Figs. 6 and 8). With a moderate tension however the period is extremely quick and by increasing the tension may usually be reduced to less than $\frac{1}{100}$ second. In practice the limiting condition here is the damping. If the tension is increased too much the instrument ceases to be aperiodic and "overshooting" occurs. The shortness of the period is due to the excessively small weight and inertia of the fibre. Its weight is approximately 10^{-6} gramme, which is of course many thousand times less than the weight of the moving system of galvanometers of the ordinary type. If the tension is relaxed the fibre may take several seconds to attain its full deflection with a consequent gain in sensitivity. The indefinite increase of period by slackening the fibre is however in practice limited by unsteadiness of zero and by the fact that, when very slack, the fibre moves out of focus when deflected.

Damping. The galvanometer is quite dead beat over a wide range, the damping being partly electromagnetic and partly due to air friction. The electromagnetic damping may be varied by altering the strength of field and the resistance in circuit with the fibre*.

Zero-keeping Qualities. From the shortest working periods up to those of several seconds the zero-keeping qualities are all that can be desired. If however the tension on the fibre is reduced too far so as to give a very long period the zero will become unsteady.

Resistance. This depends entirely on the thickness and material of the fibre, varying from about 10,000 ohms for a fine silvered quartz fibre to 4 or 5 ohms for a comparatively thick silver wire. The resistance obtained with some recently made fibres of different materials are given in the table under "sensitivity."

Optical System. The arrangement of the optical system depends on whether the deflections of the fibre are

(*a*) being observed by means of a microscope (with micrometer eye-piece),

(*b*) being projected on to a screen by means of an arc lantern,

(*c*) being recorded photographically.

The arrangements for case (*a*) are shown in Fig. 7, where

F is a "substage" condenser,

E is a microscope objective,

D is a micrometer eye-piece.

The fibre is then illuminated by light which enters at *G* and is focussed on the fibre by means of the condenser at *F*.

* The damping may also be controlled by means of a suitable arrangement of capacity and inductance in circuit (see Reference 5, page 20).

An arrangement of lenses which we have found suitable, is as follows :—

F = Zeiss Achromatic Objective AA.

E = „ Apochromatic „ 16 mm. focus.

D = „ Compensating eye-piece No. 12, fitted with eye-piece Micrometer.

Case (*b*). When the image of the fibre is to be projected on to a screen by means of an arc lantern the eye-piece micrometer is not required.

The lantern and lantern condenser lens are then placed at G and the enlarged image of the fibre is thrown on a screen at 50 to 100 cms. from A (Fig. 7).

Case (*c*). When the movements of the fibre are to be recorded photographically a cylindrical lens (J in Fig. 9) is placed between the eye-piece D and the screen, thus focussing the central portion of the beam into a thin but intense horizontal band of light in which the shadow of the fibre is condensed into what appears to be a small black spot. The distance between the fibre and the photographic screen in our standard type of camera case is 50 cms.

Astaticism. Owing to the extremely powerful field in which the fibre moves the instrument may be said to be entirely unaffected by external magnetic fields.

Sensitivity. The sensitivities obtained with several Einthoven galvanometers recently constructed by us are given in the following table with details of the resistance, etc., of the fibres used. It will be seen that the instrument is extremely sensitive. It is interesting to note in this connection that the force which deflects the fibre when a current of 10^{-12} ampère is passing through it is of the order of 10^{-8} dynes or equivalent to that produced by a weight of 10^{-11} gramme, i.e. one hundred millionth part of a milligramme.

Material of Fibre	Diameter of Fibre	Resistance in ohms	Period in seconds	Magnification	Deflection in mm.		1 mm. defl. produced by		Factor of Merit*
					per micro-amp.	per micro-volt	micro-amps.	micro-volts	
Silver wire	0·020 mm.	4·7	—	500	4·4	0·94	$2·3 \times 10^{-1}$	1·07	—
Silvered quartz fibre	0·002 mm.	20,000	—	500	62,500	3·13	$1·6 \times 10^{-5}$	$3·2 \times 10^{-1}$	—
„ „ „	0·003 mm.	6600	—†	650	333,000	50·5	3×10^{-6}	$1·98 \times 10^{-2}$	—
„ „ „	0·002 mm.	5860	0·008	750	30	0·005	$3·3 \times 10^{-2}$	2×10^{2}	117,000
„ „ „	0·002 mm.	3890	0·005	750	9·7	0·003	$1·03 \times 10^{-1}$	4×10^{2}	117,000

Photographic Recording Apparatus. The general arrangement is shown in Fig. 9. A is the wooden camera case closed in front by a door. N is a rectangular wooden slide which passes vertically through closely fitting holes in the case. It is held in place by stops so that a slit in the slide facing the galvanometer comes opposite the beam of light. The top of the wooden slide is closed and carries a pulley O over which passes a cord, one end of which is attached to a heavy metal plate-carrier which slides in grooves in the wooden slide. The pulley and top of the slide are enclosed in a light tight case. The other end of the cord passes round the drum of a speed-governing device P which consists of a centrifugal governor actuating a brake, capable of a three to one adjustment in speed. The stock size gives speeds of from about 2 to 7 cms. per second. By substituting a drum of a different diameter, a different range of speeds may be used. The photographic plate (25 cms. × 8 cms.) is inserted in the plate-carrier by means of a clipped light-tight bag. When a photograph is being taken, it is allowed to descend under the action of gravity from the top of the slide by releasing a trigger.

The galvanometer stands upon a shelf in the case at C, while the beam of light from the arc lamp in the projection lantern F passes through the optical system of the galvanometer, and falls on the cylindrical lens mounted in a screen at J. This lens focuses the central portion of the beam into a thin but intense horizontal band of light on to the film of the falling plate. This band of

* These "Factors of Merit" have been calculated on the basis of a comparison with a galvanometer having a mirror of 10 mm. diameter, see under "Sensitivity," page 3.

† In this case the movement of the fibre was quite dead beat. It took about 10 seconds to attain its full deflection.

light is interrupted by a dark space which is the image of the fibre and which moves along the band of light when the fibre is deflected. If now the photographic plate move at right angles to the band of light while the fibre is in motion a record of the movements of the fibre will be obtained as a clear line on a dark background when the plate is developed. Immediately in front of the film is fixed an adjustable pin which throws a shadow, and thus forms a zero line on the record. A time-marking arrangement may be fitted at *D* if desired.

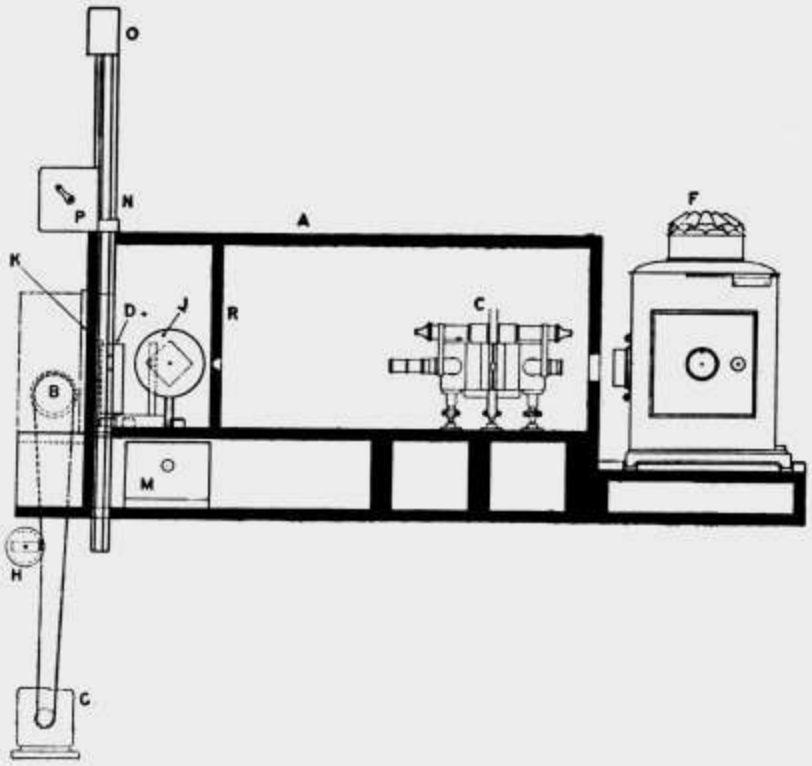

Fig. 9. Diagrammatic view of Photographic Recording Apparatus.

In order that the deflections may be observed immediately before photographing, a small hole is cut in the end of the camera-box at *K* which can be covered at will. Through this hole the movements of the spot traced on the falling plate slide can be seen in a four-sided rotating mirror which is driven by the small motor *M*. If the phenomena under observation gives movements of the fibre which reproduce themselves periodically, then, owing to persistence of vision, the curves may be seen in the rotating mirror.

Cinematograph Camera. In cases where a continuous record is required, a cinematograph camera may be used in place of the falling plate slide. This arrangement is shown dotted in Figure 9.

The cinematograph camera *B* is inserted into the camera box *A* through an opening, and its position is regulated by suitable stops so that the film is always brought to the position of correct focus without adjustment. It is also provided with a shutter which can be operated from outside the camera box. The film in the camera is driven (through a cord and pulleys, and reduction gearing) by an electric motor *G* fixed upon the floor. A lever *H*, having at one end a jockey pulley, is used to start and stop the film. The operation of the lever is so arranged that the motor is running continuously, and therefore no time is lost in getting up speed. In the 'off' position the driving cord is slack and slips on the pulley, while the wheels in the camera are held by a brake. In the 'on' position, the tension of the driving cord is increased and the brake removed so that the film starts quickly and reaches a steady speed in a very short time. The spools carry 5000 cms. of film or paper 3·5 cm. ($1\frac{3}{8}''$) wide (standard perforation), which may be used in one continuous exposure or a succession of short exposures. The exposed portion of the film can always be removed in the dark room without disturbing the unexposed portion.

Uses of the Instrument. The curves shown in the Plate at the beginning of this catalogue were obtained by Mr Keith Lucas, and give a good idea of the kind of record produced by the instrument. In Curve 2 a current of $1{\cdot}32 \times 10^{-6}$ ampères was rapidly made and broken through the galvanometer.

The fibre was kept fairly tight, so the maximum sensitivity was not attained. The velocity of the photographic plate was 5 cms. per second, so that 5 cms. of abscissae represent 1 second of time. The vertical lines are made by the time-marking apparatus, the time interval between them being 0·055 second. Although the image of the string has considerable breadth and no perfectly sharp outline, as must be expected with the high magnification employed, yet its displacement can easily be determined to a fraction of a mm. It will be seen that the deflections are quite dead beat, the damping in this case being almost entirely due to air friction, for the resistance in series with the galvanometer was far too large to allow the electromagnetic damping to become appreciable. In Curve 1, the tension on the fibre has been reduced so as to render the instrument nearly fifty times as sensitive; the current made and broken in this case being $2{\cdot}7 \times 10^{-8}$ ampères. It will be seen that in this case the fibre takes an appreciable time (nearly a second) to attain its full deflection.

In these curves the great constancy of the zero point and the equality of the deflections deserve notice, and also what is especially important for practical work with the instrument in electro-physiological measurements, the possibility of accurately fixing beforehand the sensitiveness of the instrument by adjusting the tension on the fibre.

Fig. 10. Human Electro-cardiogram.

Figures 10 and 11 are reproductions from curves obtained by Prof. Einthoven. They are "human electro-cardiograms," i.e., curves representing the variation in electromotive force due to the beat of the heart. These curves may be obtained by holding electrodes attached to the galvanometer terminals in the hands of the subject, the maximum E.M.F. so generated usually being about a millivolt. Certain precautions as to polarization of electrodes, insulation, etc., must be observed. In Fig. 10 the maximum E.M.F. was about 1·5 millivolts, this value being rather above the average. It is interesting to notice the differences in shape between the two curves, which were those of two different persons. Prof. Einthoven says, in this connection, "The constancy of shape of the curve for a certain person is remarkable. This shape seems even to change so little in course of time that with some practice one may recognise many an individual by his electro-cardiogram."

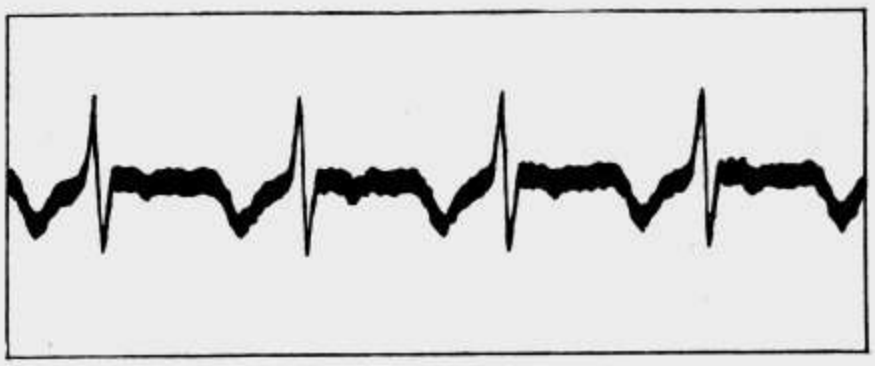

Fig. 11. Human Electro-cardiogram.

The galvanometer is very suitable for insulation testing where great sensitivity is required, and as it is practically independent of levelling, is quite unaffected by external magnetic fields and is little affected by vibration, it should therefore be very suitable for cable testing at sea.

Generally speaking, it may be used wherever small currents (whether direct or alternating) are to be recorded or measured.

Advantages. In conclusion, we would repeat that the instrument has the following important advantages:—

(1) *It is extremely sensitive—currents as small as* 10^{-12} *ampère may be detected with it.*

(2) *Deflections are proportional to the current.*

(3) *Deflections right and left of zero are exactly equal.*

(4) *The zero is extremely steady.*

(5) *The period may be made as small as* $\frac{1}{100}$ *second.*

(6) *The period and sensitivity are easily adjustable.*

(7) *The damping is adjustable and the instrument is absolutely dead beat over a wide range.*

(8) *It can be calibrated on continuous, and used on alternating, currents.*

(9) *It is practically without self-induction or capacity.*

(10) *By means of the Falling Plate Outfit rapidly varying currents of small magnitude may be observed or photographed.*

(11) *It is entirely unaffected by external magnetic fields.*

(12) *It is quite independent of levelling.*

References. The following papers, etc., will be found interesting:—

(1) W. Einthoven. "Un nouveau galvanomètre." *Archives Néerlandaises des Sciences exactes et naturelles.* Série II. Tome vi, p. 625. 1901.

(2) W. Einthoven. "Enregistrement Galvanométrique de l'électro-cardiogramme humain et contrôle des résultats obtenus par l'emploi de l'électromètre capillaire en physiologie." *Archives Néerlandaises des Sciences exactes et naturelles.* Série II. Tome ix, p. 202.

(3) W. Einthoven. "The string galvanometer and the human electro-cardiogram." *Koninklike Akademie van wetenschappen te Amsterdam.* Aug. 27, 1903, p. 107.

(4) W. Einthoven. "Ein Neues Galvanometer." *Annalen der Physik.* Vierte Folge. Band 12. 1903.

(5) W. Einthoven. "On a new method of damping oscillatory deflections of a galvanometer." *Koninklike Akademie van wetenschappen te Amsterdam.* Nov. 23, 1904.

(6) W. Einthoven. "Analyses of curves obtained with the string galvanometer." *Archives Néerlandaises des Sciences exactes et naturelles.* Tome x, pp. 414—482. 1905.

(7) W. Einthoven. "Further Researches on the applications of the string galvanometer." *Ann. d. Physik*, 21, 3, pp. 483—514. Nov. 20, 1906; and pp. 665—700. Nov. 27, 1906.

(8) Also papers by W. Einthoven in Wiedemann's *Annalen* for 1903, 1904 and 1905.

(9) A. D. Waller. "On the electromotive changes connected with the beat of the mammalian heart and the human heart in particular." *Phil. Trans. Roy. Soc.*, 180 B, 169—194, 1899.

INSTRUCTIONS FOR USE.

Detailed instructions for using the instrument will be sent to all purchasers and to those who are interested in the instrument. These instructions fully explain the method of removing the fibre from the vibrator, testing the conductivity of the fibre, etc.

PRICES.

Catalogue Number		$	Code Word
2535.	**Einthoven String Galvanometer as illustrated in Fig. 6, with silvered quartz fibre of approximately 0·002 to 0·003 mm. diameter and with a resistance from 2000 to 10000 ohms, with Zeiss AA Achromatic Objective for use at F in Fig. 7 and Zeiss Apochromatic Condenser 16 mm. focus and Zeiss eye-piece No. 12 with eye-piece micrometer. Magnification approximately 750 at 100 cms.**	**525.00**	*Mildness*
2536.	Do. do. but without optical work . .	**456.00**	*Mildew*
2537.	Galvanometer Vibrator with Micrometer head and with silvered quartz fibre of from 2000 to 10000 ohms resistance	**170.00**	*Milfoil*
2538.	Do. do. but with silver wire of about 0·02 mm. diam. and of about 5 ohms resistance . . .	**160.00**	*Miliary*
2539.	Silvered Quartz fibre with resistance of from 2000 to 10000 ohms supplied in glass tube, as shown in Fig. 8. C	**13.50**	*Milkiness*
2540.	Falling Plate Camera and slow speed slide, etc.	*Prices on application.*	

DUDDELL'S PATENT THERMAL INSTRUMENTS.

Introduction. In all branches of electrical science there is a steadily increasing demand for the accurate measurement of all the quantities involved. In one branch, namely, the measurement of small alternating currents, the progress though steady has not been quite so fast as could be wished. The want of convenient instruments and especially of portable ones for measuring small alternating currents of any frequency and wave-form has been especially felt in conjunction with telephonic measurements, wireless telegraphy and for medical purposes.

Before passing to the description of the Duddell Instruments it may be helpful to pass in review the main methods upon which sensitive alternating current instruments can be built* and to then describe in detail the instruments designed by Mr W. Duddell, F.R.S., which it is believed constitute a great step forward in providing for the measurement of small alternating currents.

For the measurement of small alternating currents of any frequency the principles on which the instrument can be based may be classified as follows:

1. **Electromagnetic Instruments.** Instruments depending on the electromagnetic forces exerted between coils and coils or between coils and iron can be constructed of very high sensibility, but in this case their self-induction is comparatively high, and the electrostatic capacity from layer to layer of the winding may be appreciable.

For frequencies of 1000 per second, such as often occur in telephone work, these defects become extremely important, and at the much higher frequencies employed in wireless telegraphy it is almost impossible to make an appreciable current flow round a closely wound instrument coil of many turns. In addition, in those instruments which contain iron, the errors due to the calibration, depending on the shape of the wave-form of the current to be measured, may be serious.

2. **Electrostatic Instruments.** Measurements of alternating currents may be made by measuring the P.D. between the terminals of a non-inductive shunt by means of an electrostatic voltmeter. For a small current, however, the P.D. available is small unless the shunt resistance is very high. Pivoted electrostatic voltmeters for the measurement of very small P.D.s are not yet available. At the same time for currents of high frequency an electrostatic instrument on account of its capacity takes an appreciable current, and at frequencies as high as 100,000 per second it may take actually more current than a Thermal Instrument.

3. **Rectifying Instruments.** With these instruments the alternating current to be measured is first rectified by being passed through some form of rectifier generally of the electrolytic type. Up to the present the development of instruments based on this principle has not made very great progress owing to the uncertainty that exists, with the present electrolytic cells, in the relationship between the magnitude of the rectified current and the alternating current that is being measured.

4. **Thermal Instruments.** Instruments based on the heating of a conductor by the current to be measured have so far given the best results in the measurements of small currents of high frequency.

Thermal instruments have the great advantage that they do not depend for their operation on magnetic fields and are practically free from self-induction and capacity errors. All Thermal Instruments depend on the measurement of the rise in the temperature of a conductor when the current is flowing. It is in the estimation of this rise in temperature that the greatest number of practical difficulties are encountered.

* W. Duddell, "Mesure des courants alternatifs de faible intensité et de grande fréquence." Conférence faite à l'école professionelle supérieure des postes et télégraphes. 24 Janvier, 1906 and *L'Electricien*, t. XXXI. p. 145, 1906.

One of the earliest Thermal Instruments was that invented in 1827 by Sir W. Snow Harris, which consisted of an air thermometer having sealed into its bulb a wire which was heated by the current to be measured. The air in the bulb expanded and forced the thread of liquid along the tube.

Three other methods are employed to indicate the rise in temperature of the conductor in designing Thermal Instruments. They are :—

(*a*) The measurement of the linear expansion of the wire.

(*b*) The measurement of the change of resistance of the conductor.

(*c*) The measurement of thermo-electric forces.

Satisfactory pivoted instruments are constructed on the principle (*a*) but so far their sensibility has been limited by mechanical difficulties. The best of the pivoted pointer instruments at present available, require something like $\frac{1}{10}$ of a watt to give the full scale deflection.

As their sensibility depends on the magnification of the small expansion of the wire when heated by the current, if the frame which supports the wire, and the wire have not exactly the same coefficient of expansion then, when the room temperature rises or falls, the instrument will deflect, producing an uncertain zero.

To get sensibility it is generally necessary to stretch the wire under an appreciable tension. The contraction and expansion of the wire under tension produces fatigue of the material so that the instrument may fail with a comparatively small overload*.

Instruments based on method (*b*) involve the measurement of the resistance of a conductor while the alternating current to be measured flows through it. This leads to rather complicated arrangements and the use of an auxiliary measuring circuit containing a source of current, resistances and a galvanometer of some kind. In the laboratory excellent results can be obtained by this method, but it cannot be compared for ease and simplicity with a direct reading pointer instrument such as the Thermal Ammeter. In common with instruments of type (*a*) instruments of type (*b*) will only stand a comparatively small overload without damage.

Method (*c*) is represented by the Thermo-galvanometer and Thermo-ammeter. The principle of these instruments is simple. The current to be measured passes through a "heater" resistance, causing its temperature to rise and heating a Thermo-junction attached to a coil supported in the air gap of a permanent magnet. In the Thermo-galvanometer the coil is reduced to a single turn of wire suspended by a quartz fibre, in the Thermo-ammeter the coil is supported on pivots and is fitted with a pointer. The Thermo-ammeter is of course a much less sensitive instrument than the Thermo-galvanometer, and bears much the same relation to the Thermo-galvanometer as a sensitive ammeter of the ordinary pivoted moving coil type does to a moving coil galvanometer. Nevertheless it is extremely sensitive and may be used to measure the current in an ordinary telephone line.

* A satisfactory non-pivoted instrument depending on the linear expansion of a wire is the Ayrton-Perry-Duddell Twisted Strip Galvanometer (see p. 31), in which currents as low as 6 milli-ampères may be measured.

DUDDELL'S PATENT THERMO-GALVANOMETER.

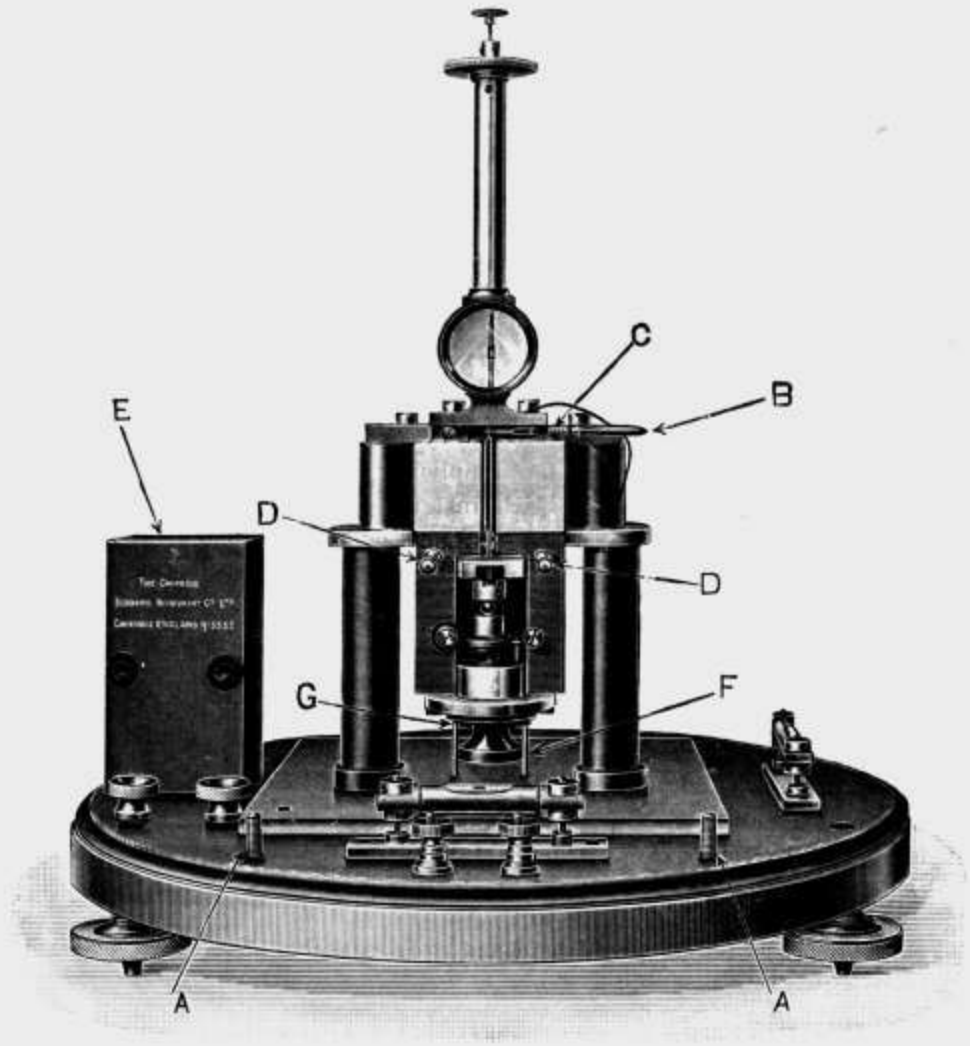

No. 2550. Fig. 12. ½ full size.

General. The thermo-galvanometer can be used for the measurement of extremely small *alternating* or non-continuous currents to a high degree of accuracy. It has practically no self-induction or capacity and can therefore be used on a circuit of any frequency (even up to several million per second) while currents as small as twenty micro-ampères may be readily *measured.* It is equally correct on continuous or alternating currents and can therefore be accurately standardised by continuous current and used without error on circuits of any frequency or wave form.

Description. The instrument consists of a resistance which is heated by the current to be measured, some of the heat thus generated heating the thermo-junction of a Boys' radio-micrometer*.

A diagrammatic view of the Thermo-galvanometer is shown in Fig. 13.

* For a description of the details and theory of this interesting instrument see *Phil. Trans. Roy. Soc. Lond.* 1889, c. LXXX. p. 159.

A single loop of silver wire *L* is suspended by means of a quartz fibre *Q*, between the pole pieces *NS* of a permanent magnet. The loop is surmounted by a glass stem *G* carried by a mirror *M*, whilst its lower ends are connected to a bismuth antimony thermo-couple (*Bi*, *Sb*). The heating resistance or "heater," consisting of a fine filament of high specific resistance (usually a platinized quartz fibre) is fixed immediately under the thermo-couple. One end of the heater is connected to the frame of the instrument to avoid electrostatic forces. Part of the heat due to the passage of the current through the resistance is radiated and carried by convection on to the thermo-junction and the resulting E.M.F. applied to the ends of the loop causes it to turn in the magnetic field. The heater filament is straight and only 3 or 4 mm. long and therefore forms, with the two straight wires leading to the terminals of the instrument, a single narrow loop of exceedingly small self-induction or capacity.

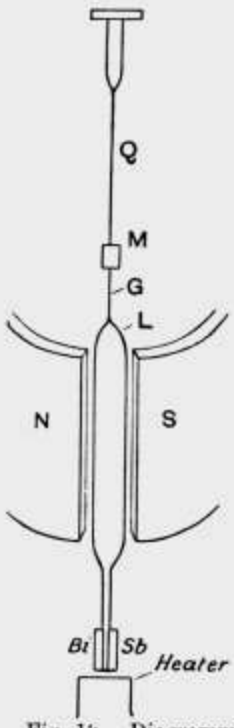

Fig. 15. Diagrammatic view of Thermo-galvanometer suspension.

The general appearance of the instrument with case removed is shown in Fig. 12. The suspension, heater, etc., are protected from sudden changes in temperature by being enclosed in a heavy metal block the front *E* of which is removable. This front (shown removed) slides over the studs *DD* and is held in place by two milled heads. The heaters are set up in small protecting cases with contact rings so that they can be interchanged quickly when it is desired to greatly alter the sensibility of the instrument. The sensitivity may also be altered by altering the distance between the couple and the heater. This adjustment is made by means of the ebonite milled head *F*. The clip which holds the heater has a spherical seating so that it may be adjusted centrally under the thermo-couple by means of the set screws *G*. The suspension may be securely clamped by unscrewing the pin *B*. A stout mahogany cover (not shown in the illustration) protects the instrument from dust and heat radiation.

Period. This is usually between 3 and 4 seconds.

Damping. The instruments are adjusted to be just aperiodic. They are very quick acting, the spot swings up to its position and almost immediately comes to rest.

Zero-keeping qualities. These depend very largely on the surrounding temperature. The steadier the temperature of the instrument the more accurately will the zero remain constant. Sudden changes of temperature are to be avoided, whilst slow alterations in the temperature, even though of large extent, are of small importance.

Resistance. This may be easily varied by substituting different "heaters." We supply heaters of six different resistances, viz., about 4, 10, 40, 100, 400 and 1000 ohms. Other resistances can be made to order. The heaters from 40 ohms downwards are metal wires and are adjusted to within about $\pm 15\,^{\circ}/_{\circ}$. Those above 40 ohms consist of a deposit of platinum on quartz and are adjusted to within about $\pm 25\,^{\circ}/_{\circ}$ of the above values. Two heaters of approximately 4 and 100 ohms are supplied with each instrument.

Optical System. Every care is taken to make this as perfect as possible. The instrument is usually fitted with a plane mirror and convex lens of 1 metre focal length (for 1 metre scale distance). If required lenses of 2 metres focal length will be supplied or plane glass may be substituted for the lens for use with the telescope instead of a lamp, but as the mirror is necessarily small the illumination of the scale must be good.

Astaticism. As the silver loop is situated between the poles of a powerful permanent magnet the instrument is almost entirely unaffected by external magnetic fields.

Sensitivity. We give below a table of approximate sensitivities based on results obtained with instruments recently constructed. The deflections of the instrument are practically proportional to the square of the R.M.S. values of the current when the heater is central under the junction.

Table of Approximate Sensitivities. Scale distance 1000 *mm.*

Resistance of heater	Current to give 250 mm. deflection	Current to give 10 mm. deflection	P. D. to give 250 mm. deflection	P. D. to give 10 mm. deflection	
ohms	micro-ampères	micro-ampères	milli-volts	milli-volts	
about 1000	110	22	110	22	heater close to junction
" 400	175	35	70	14	
" 100	350	70	35	7	
" 40	550	110	22	4·4	
" 10	1100	220	11	2·2	
" 4	1750	350	7	1·4	
" 1	3500	700	3·5	0·7	
" 1	10000	2000	10	2·0	heater lowered away from junction

It will be seen from the above figures that the smallest measureable current is 22 micro-ampères and the smallest detectable current is 2·2 micro-ampères with a 1000 ohms heater.

Advantages.

(1) *It is extremely sensitive.*

(2) *It can be calibrated with continuous and used with alternating currents.*

(3) *It has practically no self-induction or capacity.*

(4) *It has a short period and is very dead beat.*

(5) *The resistance can be varied within wide limits.*

(6) *It is unaffected by external magnetic fields.*

(7) **Currents of any frequency may be measured.** It has recently been shown that currents of extremely high frequency should be used to prevent polarization when measuring the resistance of electrolytes. See Appendix II. "On the resistance of an Electrolyte"—"On the Resistance and Electromotive Forces of the Electric Arc" by W. Duddell, *Phil. Trans. Roy. Soc. A.* Vol. 203, pp. 305—342.

Telephone Currents may be measured. See "Instruments for the measurement of large and small alternating currents" by W. Duddell, *Phil. Mag.*, July 1904, in which it is mentioned that "on making a suitable noise into a Bell telephone-receiver sufficient current is generated to send the spot off the scale; and that if the thermo-galvanometer be connected to the line wires of a microphone-transmitter arranged in the ordinary way whistling at a distance of from 15 to 20 feet from the microphone will cause deflexions of the instrument of several hundred scale divisions."

The currents in the receiving aerial used in Wireless Telegraphy can be measured. See "Wireless Telegraphy Measurement" by W. Duddell and J. E. Taylor, *Journal of Inst. of Elec. Engineers*, Vol. 35, p. 321; "Directed Radiation of and Receptivity for Electric Waves," by G. Marconi, *Roy. Soc. Proc.* Ser. A. 77, Apr. 1906 and *Electrician*, 57, pp. 100—102, May 4, 1906; "A Directive System of Wireless Telegraphy" by E. Bellini and A. Tossi, *Electrical Engineering*, Nov. 14, 1907.

INSTRUCTIONS FOR USE.

Position. The instrument should be set up on a solid support such as is suitable for an ordinary sensitive galvanometer. The position selected for the instrument should be such that the temperature is as uniform as possible.

Levelling. The instrument should be levelled by means of the levelling screws on the base, as indicated by the two spirit levels, and the polished wooden cover removed by unscrewing the milled heads on the studs *A*.

Clamping arrangement. The loop should then be unclamped by *carefully* screwing the brass pin *B* into the small hole *C*, just below the mirror on the right-hand side of the instrument. The loop should then swing freely. When clamping the loop, care should be taken that the mirror is facing the front of the instrument. The pin *B* should then be *slowly* unscrewed so that the mirror rises *vertically*. If it does not do this the loop will touch the sides of the plate, through which the couple passes, and may become bent.

When the loop is free the wooden cover should be replaced and the wooden cap removed. The spot may then be adjusted to zero by turning the torsion head. The wooden cap should then be replaced, as the instrument is very sensitive to changes of temperature, the warmth of the hand, when turning the torsion head, being sufficient to alter the zero. To obtain the highest accuracy in taking readings it is advisable to note the zero after each observation.

Adjustment of Heater. To adjust the heater unscrew the milled heads on the studs *DD* and remove the gun-metal screen *E*. The distance of the heater from the couple is adjusted by means of the ebonite milled head *F*. The clip, which holds the heater, has a spherical seating so that it may be adjusted centrally under the thermo-couple, by adjusting the set screws *G*. Before removing or inserting the heater always lower it as far as it will go by means of the ebonite milled head *F*. When finally adjusted the heater should be as close as possible to the thermo-couple without actually touching it. It is advisable to use a small magnifying-glass for this last adjustment, as if the thermo-couple is allowed to touch the heater there is great risk of its being broken.

PRICES.

Catalogue Number		$	Code Word
2550.	**Thermo-galvanometer with 4 and 100 ohm heaters**	**155.00**	*Maniple*
2551.	4 ohm heaters	**4.00**	*Manna*
2552.	10 „ „	**4.00**	*Mantua*
2553.	40 „ „	**4.00**	*Manumit*
2554.	100 „ „	**4.00**	*Mappery*
2555.	400 „ „	**5.00**	*Maple*
2556.	1000 „ „	**6.00**	*Marchpane*

DUDDELL'S PATENT THERMO-AMMETER.

No. 2560. Fig. 14. ¼ full size.

Description. The general appearance of the instrument is shown in Fig. 14, while Fig. 15 is a sectional diagram showing the general arrangement of the heater and coil, etc. *D* is the moving coil which moves in the field produced by the permanent magnet *BB*. *AA* are soft iron pole pieces and *C* is a cylindrical core so that the field in which the coil moves is truly radial. *EE* are the pivots which it will be seen are fixed *inside* the coil so that when the instrument is in a horizontal position (the correct position for use), the coil is practically suspended from the

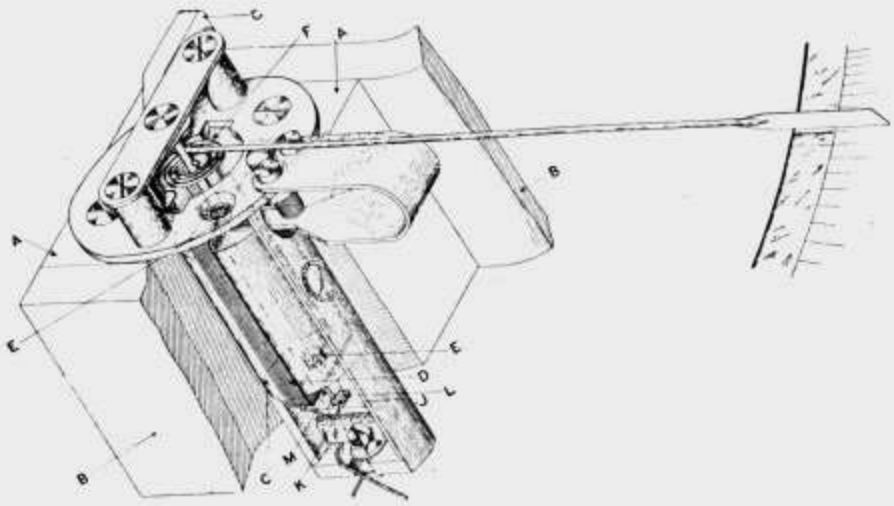

Fig. 15. Sectional diagram of Thermo-ammeter.

top pivot, the lower pivot being almost entirely out of action. By this means pivot friction is reduced to a minimum. The ends of the coil are brought out at the bottom and soldered to the ends of the thermo-junction *LM*, the elements of which are made from special alloys which have a very high thermo-electric force. The lower ends of the couple are soldered to a thin circular "receiving plate." Immediately below the receiving plate the heater *K* is fixed. In instruments to give the full deflection for 20 milli-ampères or less, this heater consists of a sheet of platinized mica, the platinum being scraped away to form a sort of gridiron. By this means resistances of several hundred ohms may be easily obtained in a space of less than 0·2 s. cm. For currents above 20 milli-ampères the heater is of wire. When in use the current to be measured passes

through the heater *K*, which in consequence becomes heated and so warms the receiving plate *J* and thermo-couple *LM*. The resultant E.M.F. of the couple causes a current to flow round the coil which turns in the magnetic field, the deflection being indicated by a pointer moving over a scale in the usual way. It will be seen that no current passes through the control spring *F*; the material for the spring may therefore be selected without reference to its electrical resistance. One end of the control spring is attached to the lever *G*, which is connected to the zero adjusting screw outside the case. The whole instrument is contained in a polished teak case with a leather handle.

Resistance. Heaters of two standard resistances (about 150 and 2 ohms) are generally held in stock, although heaters of other resistances will be made to order. 150 ohms has been found suitable for telephone work and 2 ohms for use with wave-meters in wireless telegraphy.

Sensitivity. The instrument is extremely sensitive. In the pattern usually supplied (with a resistance of about 150 ohms) the full scale deflection is produced by a current of 10 milliampères either continuous or alternating, and by constructing heaters of higher or lower resistance the sensibility to current may be increased or reduced as required. The scale is a long one, viz. 160 mm. The maximum power taken by the instrument is extremely small, i.e. about 0·015 watt, which is far less than taken by the average "hot wire" ammeter, and it will stand a much greater overload, i.e. about three times its maximum working current.

Self-Induction and Capacity. The instrument has excessively small self-induction owing to the "gridiron" shape and small size of the heater. The total number of "bends" does not usually exceed 8 or 9. The instrument has a negligible capacity.

Damping. The instrument is perfectly dead beat; but, like other thermal instruments, takes a certain time to attain its final deflection.

Temperature Coefficient. When used as an ammeter the temperature coefficient is about 0·01 per cent. per degree C. When used as a voltmeter (without series resistance) the temperature coefficient is about 0·1 per cent. per degree C. Of course, if a high resistance of negligible temperature coefficient is used in series with the instrument, this value will be correspondingly reduced.

Advantages. The principal advantages and some of the uses of the Thermo-ammeter may be summarised as follows:—

(1) *It takes a very small power to give the full scale of deflection.*

(2) *It is extremely sensitive as an ammeter or voltmeter according to whether it is constructed with a high or low resistance heater.*

(3) *It can be calibrated with continuous and used with alternating currents.*

(4) *It has practically no self-induction or capacity and measures accurately currents of any frequency or wave-form.*

(5) *It has a low temperature coefficient.*

(6) *It is very portable and does not require levelling.*

(7) *It is direct reading.*

(8) *It will stand a* 100 *to* 200 *per cent. overload easily.*

(9) *The resistance through which the current to be measured passes is not subjected to any tensile or bending strains.*

(10) *The current in telephone lines can be easily measured.*

(11) *It is very suitable for use with wave-meters in wireless telegraphy, owing to the small damping produced as the power taken by the instrument is small.*

(12) *When used in series with high resistances, it forms a very convenient voltmeter.*

(13) *The R.M.S. current (or the heating value of the current) in X-ray tubes and in secondaries of medical induction coils can be measured. For many purposes it is more important to know this value than the mean value usually measured.*

PRICES.

Catalogue Number		$	Code Word.
2560.	Duddell Patent Thermo-ammeter, having a resistance of about 150 ohms and giving a maximum deflection for 10 milli-ampères. (Power required to produce full scale deflection 0·015 watt.) Suitable for measuring telephone currents	**140.00**	*Milkscore*
2561.	,, ,, with heater of 0·5 to 2 ohms, suitable for use with wave-meters in wireless telegraphy	**140.00**	*Milldam*

AYRTON-PERRY-DUDDELL TWISTED STRIP GALVANOMETER.

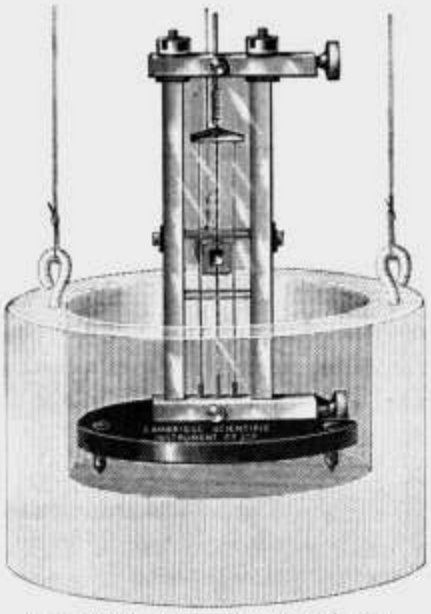

No. 2565. Fig. 16. ½ full size.

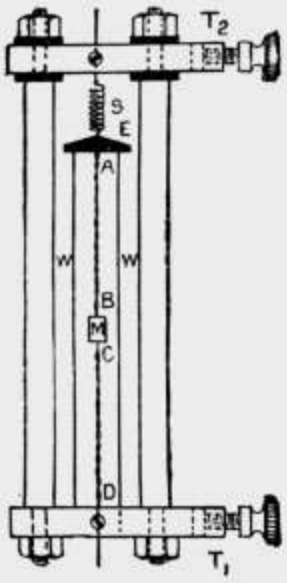

Fig. 17. ½ full size.

General. The instrument is essentially a very sensitive Ayrton-Perry Twisted Strip Ammeter, with a temperature compensation device to minimize the zero creep when the temperature of the whole instrument changes.

Description. The instrument is shown suspended in an anti-vibration stand in Fig. 16, whilst the working parts are shown diagrammatically in Fig. 17. *ABCD* is the Ayrton-Perry twisted strip, of which the parts *AB* and *CD* are twisted in opposite directions. A mirror *M* and a very thin mica damping vane are fixed at its centre. The strip is stretched in a frame formed of a brass block T_1, carrying one terminal and a piece of ebonite *E*, the sides of the frame being formed of wires *W*, *W*. This frame itself is stretched by means of a spiral spring *S* fixed to the other terminal block T_2. The twisted strip *ABCD* and the wires *W*, *W* are made of the same metal, so that the twisted strip and wires have the same temperature coefficient of expansion. If the wires and strip rise in temperature equally then the whole frame $WEWT_1$ simply gets longer and no twist of the mirror ensues. If, however, a current be sent from T_1 to T_2 through the strip, then it heats and twists up, rotating the mirror *M*. The strip is made of platinum silver 0·025 mm. thick.

Period. The instrument has a period of about $\frac{1}{15}$ second.

Damping. The instrument is quite dead beat and very quick acting, so that it is able to follow currents which vary over a small range as rapidly as one or two cycles per second.

Zero keeping qualities. Owing to the temperature compensation device change of zero is reduced to a minimum.

Resistance. The resistance of the instrument is usually about 13 ohms.

Optical system. The instrument is fitted with a plane mirror and convex lens of 1 metre focal length, which gives a well-defined spot at a scale distance of 1 metre.

Astaticism. As there is no magnet in the instrument and it depends for its working entirely on thermal effects, it is quite unaffected by external magnetic fields.

Sensitivity. We give below the data of one of these instruments recently constructed. The deflections are approximately proportional to the square of the current.

Resistance of Instrument No. 3996 = 13·5 ohms at 15° C.

Current to give 250 mm. at 1000 mm. scale distance = $32{\cdot}7 \times 10^{-3}$ amp.

P.D. " " " " " " = 0·442 volt.

Taking 10 mm. as the *smallest measurable* deflection and 0·1 mm. as the *smallest detectable* movement:

The smallest measurable current = $6{\cdot}05 \times 10^{-3}$ amp.

" " detectable " = $0{\cdot}6 \times 10^{-3}$ amp.

Applications. These instruments are most useful for observing the quick variations of the R. M. S. voltage in supply stations produced either by cyclic irregularity of the engine or by phase-swinging between alternators, converters, etc.

By working to a false zero a sensibility of 10 mm. change in deflection for 1 per cent. change in the P. D. may be obtained. By observations of this kind it is often possible to trace the causes of alternators not operating properly in parallel, and to find which engine and which particular defect is the cause.

Figs. 18 and 19 are two records (taken with an oscillograph film-camera) obtained on a circuit in which there was purposely produced a cyclic irregularity having a known wave-form. In each case the cyclic change on the voltage was about ±1 per cent. from the mean. In Fig. 18 the voltage was changing sinusoidally about 121 ~ per minute, and in Fig. 19 it was changing along a square wave-form about 68·5 ~ per minute.

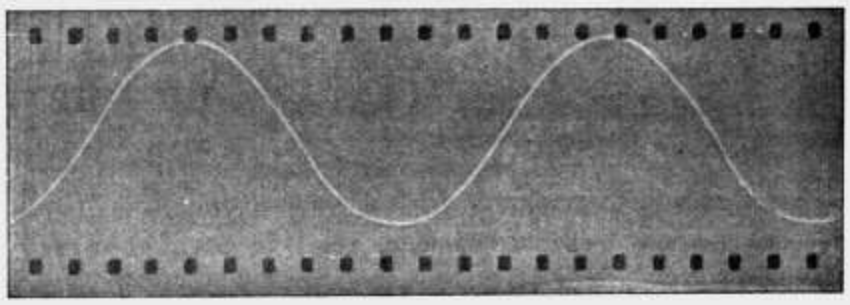

1 second

Fig. 18.

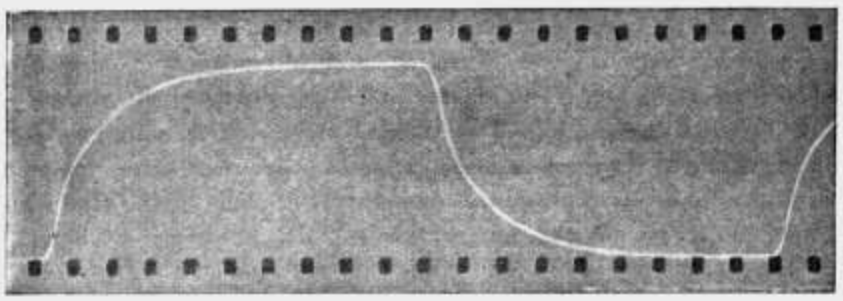

1 second

Fig. 19.

In this latter record the shape of the curve of growth and decay of deflection and the consequent rounding off of the corners of the curves are well shown. In both records 10 mm. = 1 per cent. change in voltage, and 100 mm. = 1 second.

Advantages. Some of the principal advantages are as follows:

It is very robust and can be carried about in the pocket.

It is easily set up and requires no levelling.

It is independent of changes in atmospheric temperature.

The self-induction and capacity are extremely small.

It has a wide range of usefulness—as a voltmeter it can be used down to 0·1 volt, and when in series with high resistances up to 10,000 volts. It can of course be shunted to measure large currents.

INSTRUCTIONS FOR USE.

Position. The instrument should be set up on a solid support such as is suitable for an ordinary sensitive galvanometer. As, however, it is rather sensitive to quick mechanical vibrations, it is preferable to stand the instrument in the metal block (see Fig. 16) supplied with it, and suspend the whole by means of wires and spiral springs. Any strong wire will do. The springs should stretch with the weight of the metal block and instrument to twice their unloaded length. With wires longer than 50 cm. springs are not necessary. The movement of the block may be damped by means of a camel's hair brush just touching it. The instrument does not require levelling.

Adjustment of Tension. The instruments are correctly adjusted when sent out from our works. The tension of the spiral spring S is altered by means of the set screw in block T_2. It should be sufficiently tight to keep the frame $WEWT_1$ rigid, so that practically all the pull of the spring S is borne by the wires W, W and as little as possible by the twisted strip $ABCD$. The tension on the strip itself is adjusted by means of the set screw in block T_1, so that the mirror rotates between 90° and 180° from its original position when the strip was quite slack. While adjusting the tension of the strip it will probably be necessary to remove the cover-glasses from the front and back of the instrument. These are held in place by two clips, one on each side of the frame. The tension on the strip should be finally adjusted with the cover-glasses in position, so that the mica damping vane is quite free to rotate and does not touch the glass either at the back or front.

For some purposes it is necessary to work to a false zero. The zero of the instrument should then be set up by increasing the tension on the strip. The deflections of the instrument are approximately proportional to the square of the current.

PRICES.

Catalogue Number		$	Code Word
2565.	Ayrton-Perry-Duddell Twisted Strip Galvanometer, with heavy suspended metal base as shown in Fig. 16	70.00	*Margarite*

THE GRASSOT FLUXMETER*,

for the Exploration of Magnetic Fields.

No. 2570. Fig. 20. ½ full size.

No. 2570. Fig. 21. ½ full size.

This instrument is a galvanometer with a suspended coil, specially designed for the measurement of magnetic fields.

It has the important advantage that its indications are determined solely by the total quantity of electricity discharged through the suspended coil, and are practically independent of the suddenness or slowness with which that discharge has taken place.

It has the further advantage that the index (or spot of light) pauses for an appreciable time instead of momentarily at the limit of its deflection; this feature greatly facilitates the reading, as no sensible change occurs in ten seconds after the first deflection.

If for example a search coil connected to the terminals of the fluxmeter is placed in a magnetic field so that a certain number of magnetic lines are interlinked with it, then the pointer of the instrument will move and its deflection will be proportional to the total change in the lines of force interlinked with the coil. *Whether the exploring coil is moved suddenly from its final position, or whether it is moved fairly gradually, the deflection observed is precisely the same.* When the exploring coil is withdrawn to its original position, the pointer returns to zero, where it comes to rest.

Description. The general appearance of the instrument is shown in Fig. 20, and in Fig. 21 it is shown with the case removed. The instrument is essentially of the ordinary "moving coil" type. In an instrument of this type when the coil is set in motion, the forces which tend to bring it to rest are:—

(1) The controlling force due to the stiffness of the suspension. This is proportional to the angle turned through by the coil.

* We are the sole agents for the sale of this Instrument in the United Kingdom, British Colonies, United States of America, Norway and Sweden.

(2) Electro-magnetic damping forces due to the currents induced in the coil by its movements in the magnetic field. These are proportional to the angular velocity of the coil.

(3) Damping forces due to the friction of the air. These are roughly proportional to the angular velocity of the coil.

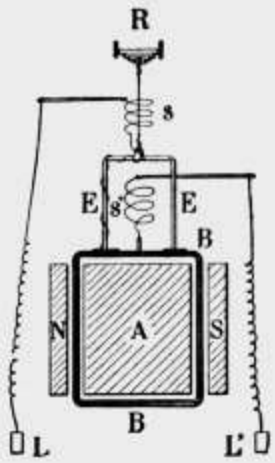

Fig. 22.

In an ordinary moving coil galvanometer used ballistically for magnetic measurements

(1) is usually predominant, while (2) is small and (3) is generally negligible. In the fluxmeter, however, (1) is made as small as possible, and all the controlling forces are due to (2) electro-magnetic damping, while (3) is practically negligible as before. A diagram of the suspension is shown in Fig. 22.

The suspension consists of a single cocoon silk fibre, the upper end of which is attached to a flat spiral spring *R* to minimise the effect of shocks. The current is led in and out of the coil *B* by means of spirals of thin silver strip (*S* and *S'*), so that the whole arrangement exerts hardly any controlling force on the coil. The electro-magnetic damping is made sufficiently great by making both galvanometer and search coil of fairly low resistance. The fact that the only appreciable forces which limit the deflections of the coil are those due to electro-magnetic damping gives the instrument its most valuable property of giving readings which are independent of the rate of discharge of the current through its coil. For the mathematical proof of this, see under "Theory of Instrument."

The instrument is fitted with levelling screws and has a clamping device to secure the coil during transit. In addition to the pointer it is fitted with a concave mirror, so that for accurate work a light spot may be used as index instead of the pointer. The beam of light enters through a small window in the back of the case.

Periodic Time. If the suspension exercised no control whatever, as it should do if the theory of the instrument is to be exact, the periodic time would be infinite, but this is impossible to realize in practice, so that on open circuit, when the instrument is practically undamped, its free periodic time is usually about 40 to 60 seconds.

Damping. The instrument is aperiodic when connected to its search coil, the resistance for critical damping being about 300 ohms. The coil is not wound on a closed metal former, so that the instrument may be used undamped on a high resistance circuit as a ballistic galvanometer in the ordinary way.

Zero-keeping qualities. As the suspension exercises practically no control over the coil it cannot bring the pointer back to zero, but this is effected automatically when the search coil is withdrawn from the field in which it has been inserted. Any small residual deflection is eliminated by the operation of the clamping arrangement.

Resistance. The resistance of the instrument is usually about 20 ohms.

Optical System. A concave mirror of 15 mm. diameter and 50 cms. focal length (for 100 cms. scale distance) is fitted to the instrument. Owing to the large size of the mirror and the comparatively short scale distance a brilliant spot is obtained.

Astaticism. As the field in which the coil moves is due to a powerful permanent magnet the instrument is practically unaffected by external magnetic fields. It is of course advisable not to bring the fluxmeter very near to a large dynamo.

Sensitivity. The zero of the instrument is at the mid-point of the scale which is divided into 100 divisions to the right and left of zero, each division usually corresponding to 10,000 maxwells; in this case if the fluxmeter is connected to a search coil of 50 turns and 200 C. G. S. magnetic lines of force are cut by the coil, the change of flux through the circuit will be 50×200 or 10,000 maxwells, and thus a deflection of one division will be produced. If the mirror with lamp and scale is used the sensitivity will be increased about 20 times. If the instrument is used as a ballistic galvanometer, a deflection of 1 scale division will be produced by about 0·1 microcoulomb.

Advantages. The principal advantages of the instrument are as follows:—

(1) *Its deflections are practically independent of the rate at which the search coil cuts the magnetic lines of force.*

(2) *Values of flux density may be obtained by multiplying the scale readings by an appropriate constant.*

(3) *By using search coils having different numbers of turns a large range of magnetic fields may be measured.*

(4) *It is fitted with a mirror and may be used with lamp and scale if desired.*

(5) *On high resistance circuits it may be used as a ballistic galvanometer in the ordinary way.*

(6) *It is practically unaffected by external magnetic fields.*

(7) *It is quite dead beat when used with an ordinary search coil.*

(8) *It has a proportional scale.*

INSTRUCTIONS FOR USE.

Levelling. Level the instrument by means of the three levelling screws in the base, so that the bubble is central in the level.

Clamping. Unclamp the instrument by giving the milled head in the front of the case a half turn. The pointer should then remain at zero. If it does not its zero may be adjusted by removing the case and turning the milled collar to which the upper silver spiral is attached. This collar is held in position by a set screw which must be slackened before moving the collar. It will, however, in practice, be found more convenient to work by the differences of successive readings, rather than to attempt to get exact adjustment of zero.

MEASUREMENTS.

1. *Measurement of the strength of a magnetic field.*

In order to measure the flux-density at any point, a search coil is used of such small dimensions that the flux-density may be assumed to be sensibly uniform throughout the region occupied by the coil. Let

A = area enclosed by a mean turn in square cms.,

n = number of turns in the search coil,

B = flux density,

F = total interlinkage of magnetic lines of force with the coil.

Then $$F = nAB \text{ maxwells} \quad \ldots\ldots (1),$$

and $$B = \frac{F}{nA} \quad \ldots\ldots (2),$$

so that if the number of maxwells corresponding to one scale division (as engraved on the instrument) is divided by nA we obtain the value of each scale division in C. G. S. lines of force per sq. cm. By multiplying the deflection obtained by this constant the value of B may then be determined.

When, as in many cases, the region to be explored is filled only with air, or with other non-magnetic material, the magneto-motive force per unit length (H) may be identified with the flux-density, since the magnetic permeability is unity on the C. G. S. electro-magnetic system, i.e. $H = \frac{B}{\mu}$, therefore when $\mu = 1$, $H = B$.

The method of taking measurements by means of the instrument is best shown by an example.

Fluxmeter No. 55:

1 division corresponds to 10000 maxwells.

Search coil No. 7:

Number of turns = 100,

Mean area of one turn = 5·44 sq. cms.

Hence when search coil No. 7 is connected to the fluxmeter,

$$1 \text{ scale division has a value of } \frac{10000}{100} = 100 \text{ C. G. S. lines}$$

or

$$\frac{10000}{100 \times 5{\cdot}44} = 18{\cdot}38 \text{ C. G. S. lines per sq. cm.}$$

Suppose for example the deflection is 86 scale divisions, then

the total flux interlinked with the search coil $= 86 \times 100 = 8600$ C. G. S. lines,

and the flux density $= 86 \times 18{\cdot}38 = 1581$ lines per square cm.

2. *Pole-strength and distribution of magnetism in a bar-magnet.*

The exploring coil is to be of such dimensions that it allows the bar-magnet to pass freely through it, while encircling the magnet as closely as possible. If the magnetization of the bar is approximately uniform, so that the poles are near the ends, and if the exploring coil starting from rest about the middle of the bar is drawn over one end, the change of flux passing through the coil is equal to $4\pi m$, where m is the strength of pole.

To obtain the strength of pole, then, we have only to divide the total flux by 4π. In the example of fluxmeter No. 55, already given and using the same search coil, the strength of pole would be equal to the number of divisions in the deflection obtained, multiplied by 100 and divided by 4π, that is to say 685 C. G. S. units. If the exploring coil, instead of being moved directly to the centre of the magnet, is advanced step by step, while corresponding readings are taken on the dial, the *distribution* of magnetism along the bar is similarly obtained.

3. *To obtain a BH curve for a specimen of iron.*

The iron should be in the form of a ring, uniformly wound with a primary winding and also provided with a secondary winding. The primary winding should be connected through a reversing key to a battery, the circuit also including an accurate ammeter. The secondary coil is connected to the fluxmeter. After the primary current has been reversed *many times*, the deflection of the fluxmeter due to a reversal is noted.

A series of observations are taken with various magnetising currents. When the current is small it will be necessary to use a large number of turns of secondary windings, but as the current is increased the number of turns must be diminished so as to prevent excessive deflections of the fluxmeter.

If the mean radius of the ring is r cms., and if the primary winding has N turns, there are $N/2\pi r$ turns per cm. of mean circumference, and hence if H be the magnetic force due to a current of C amperes,

$$H = 4\pi \frac{N}{2\pi r} \frac{C}{10} = \frac{NC}{5r} \quad \text{.....(3).}$$

The value of B is obtained in the manner described in paragraph 1 except that since the current is *reversed*, the flux density changes from $+B$ to $-B$ (provided the ring is free from

permanent magnetism), and consequently the value of B given in equation (2) has to be divided by 2, so that

$$B = \frac{F}{2nA} \text{ c. g. s. lines per sq. cm.} \quad \ldots\ldots\ldots\ldots\ldots\ldots\ldots\ldots\ldots (4).$$

The observation may be recorded as in the following practical example:

Mean radius of ring = 4·11 cm.

No. of primary turns = 120.

$H = 5{\cdot}85 \times C$.

Cross section of ring = A = 3·62 sq. cms.

Number of secondary windings = n (variable).

Change of flux corresponding to 1 division of fluxmeter = 10^4 maxwells.

θ = deflection of fluxmeter.

$$B = \frac{F}{7{\cdot}24 \times n} = \frac{10^4 \times \theta}{7{\cdot}24 \times n}.$$

Current in amperes (C)	Magnetic force in c. g. s. units (H)	Divisions on fluxmeter (θ)	No. of turns of secondary (n)	Flux density in c. g. s. lines per sq. cm. (B)	Permeability $\mu = \frac{B}{H}$
·1	·58	2·1	20	140	241
·2	1·17	8·6	20	596	510
·3	1·75	21·8	20	1500	857
·4	2·34	47·8	20	3300	1410
·5	2·92	68·4	20	4720	1620
·6	3·51	42·2	10	5820	1660
·7	4·10	48·4	10	6680	1630
·8	4·68	52·9	10	7300	1560
·9	5·26	57·5	10	7940	1510
1·0	5·85	61·0	10	8420	1440
1·1	6·44	64·0	10	8840	1370
1·3	7·60	69·5	10	9600	1260
1·5	8·78	73·8	10	10180	1160
2·0	11·7	81·8	10	11280	964
2·5	14·6	88·7	10	12230	838
3·0	17·5	46·0	5	12700	726
4·0	23·4	49	5	13520	579

4. *To measure the Coefficient of Mutual Induction of a pair of coils.*

The primary coil is connected through a reversing key to a battery and the circuit includes an accurate ammeter. The secondary coil is connected to the fluxmeter. The primary current is then reversed and the resulting deflection of the fluxmeter is noted. The change of flux is then deduced from the deflection. The flux through the secondary coil is changed by $2CM/10$ c. g. s. lines when the primary current of C ampere is reversed, if the coefficient of mutual induction is M c. g. s. units.

Hence $$M = 5\,\frac{\text{change of flux}}{C}.$$

The observations may then be repeated with other values of the current as in the following practical example. From these observations the mean value of M should be deduced.

Value of 1 division of fluxmeter = 10^4 maxwells.

C	·4	·5	·6	·7	·8	·85 amperes
θ	45·8	57·0	68·0	79·4	91·2	97·2 divisions
M	$5{\cdot}72 \times 10^6$	$5{\cdot}70 \times 10^6$	$5{\cdot}67 \times 10^6$	$5{\cdot}67 \times 10^6$	$5{\cdot}70 \times 10^6$	$5{\cdot}72 \times 10^6$ cms.

The mean value is $M = 5{\cdot}697 \times 10^6$ centimetres

$= 5{\cdot}697 \times 10^{-3}$ henrys.

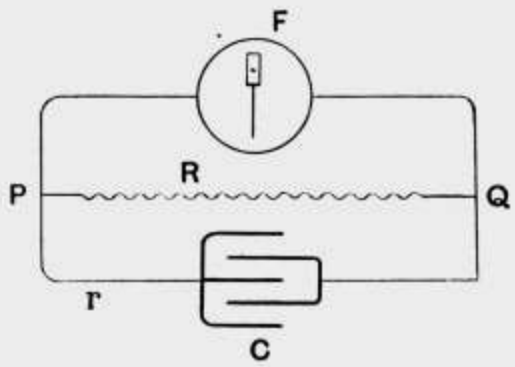

Fig. 23.

The instrument may also be used for the measurement of a discharge through a non-inductive shunt. A diagram of the connections is shown in Fig. 23 in which the fluxmeter F is connected across the terminals of the low resistance shunt R. Then *coulombs* discharged through shunt

$$= \frac{\text{(divisions on fluxmeter) (maxwells equivalent to one division of the fluxmeter)}}{\text{(resistance of shunt in ohms)} \times 10^8}.$$

It is important to keep the resistance of the shunt low, say about 0·1 ohm.

THEORY OF THE INSTRUMENT.

The predominant damping effect is electromagnetic, and is due to the E. M. F. induced in the suspended coil by its motion in the field of the permanent magnet. The air-damping is very slight in comparison, but as no loss of simplicity is involved, we will retain in our equations a term corresponding to this latter effect.

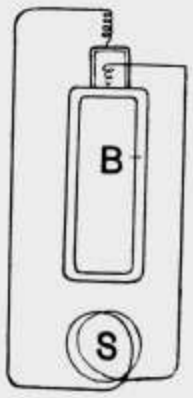

Fig. 24.

Let the suspended coil B be joined in series with the exploring coil S (Fig. 24).

Let

r = total resistance of the circuit.

E = E. M. F. induced in the exploring coil S at any instant, owing to the rate at which the flux of magnetic induction through S is changing.

I = current which at any instant is flowing in the circuit.

ω = angular velocity with which the suspended coil B is turning at any instant.

θ = angular displacement of the coil B, reckoned from the zero position.

L = coefficient of self-induction of the whole circuit.

Mk^2 = moment of inertia of the suspended coil.

$-K\omega$ = E. M. F. induced in the suspended coil B owing to its angular velocity ω.

CI = mechanical turning moment experienced by the coil B in virtue of the current I flowing through it.

$-A\omega$ = mechanical turning moment exerted on the coil B owing to the resistance of the air. (The turning moment exerted on the suspended coil contains no appreciable term depending on the *position* of the coil, because the suspension is arranged to exert only a negligible controlling force.)

Now the pole pieces N, S and the core A (Fig. 18) are so shaped that, throughout the range of its possible motion, the coil B lies in a field of unvarying strength, the other circumstances affecting it being likewise invariable; accordingly

L, K, C, A are all constant.

Thus we have

$$E - Ir - K\omega - L\frac{dI}{dt} = 0 \quad \text{.....(1),}$$

$$Mk^2\frac{d\omega}{dt} = -A\omega + CI \quad \text{.....(2).}$$

From (1)

$$I = \frac{E - K\omega - L\,dI/dt}{r},$$

and substituting this in (2) gives

$$Mk^2\frac{d\omega}{dt} = -\left(A + \frac{CK}{r}\right)\omega + \frac{C}{r}E - \frac{CL}{r}\frac{dI}{dt} \quad \text{.....(3).}$$

In integrating (3) with respect to time, we will confine ourselves to the practical case, in which the coil B rests initially in the zero position with no current flowing in the circuit; while after the exploring coil S has been introduced into a magnetic field and brought to rest there, we observe the new position in which the index of the instrument comes to rest, the current being then, as at first, zero.

Thus at both limits of the time-integration we have $\omega = 0$, $I = 0$, and consequently neither the left-hand of (3) nor the last term on the right-hand contributes anything to the final result, which may be written

$$0 = -\left(A + \frac{CK}{r}\right)\int\omega dt + \frac{C}{r}\int E dt,$$

or

$$\int E dt = \left(\frac{A}{C}r + K\right)\theta \quad \text{.....(4).}$$

Since A, C, r and K are all constants of the instrument and its connections, we have the interesting result that the deflection θ is determined solely by the total value of the electromotive impulse $\int E dt$; and is the same whether that impulse is suddenly or gradually applied.

In equation (4), the coefficient of θ is made up of two terms, of which the first arises from air-damping, and the second from electromagnetic damping. The air-damping is relatively very slight so that we may write, to a fair degree of approximation,

$$\int E dt \fallingdotseq K\theta \quad \text{.....(4a),}$$

which expresses that, when the air-damping is negligible, the angular deflection produced by a given electromotive impulse is equal to that impulse divided by the constant K; this constant being

numerically equal to the E. M. F. induced in the suspended coil by rotating it at the rate of one radian per second. To this order of approximation the resistance of the circuit is without effect on the readings obtained.

Equation (4a) expresses a relation which has been pointed out by Mr G. F. C. Searle, F.R.S. In the case where a search coil is joined in series with the fluxmeter, the left-hand side is the equivalent of the total lines of induction cut by all the turns of the exploring coil, while the right-hand side is equivalent to the total lines cut in the opposite sense by all the turns of the suspended coil. The conclusion is that, to the order of approximation attaching to (4a) if any change is to be made in the number of lines embraced by all the turns of the search coil, the suspended coil will move into such a position that the number of lines embraced by the entire circuit is the same as at first.

The instruments are standardized experimentally, the value of each scale division being expressed as a number of maxwells.

PRICES.

Catalogue Number		$	Code Word
2570.	**Fluxmeter complete, with dial-scale and reflecting mirror, and including exploring coil** . .	**155.00**	*Margrave*
	The exploring coil is of about 100 turns with a mean area of about 5 or 6 square centimetres, so that field-strengths up to about 1700 lines per square centimetre can be measured.		
2571.	Thin exploring coil suitable for determining the strength of dynamo and motor fields	**23.00**	*Madcap*
	Extra exploring coils can be supplied to order.		

DUDDELL'S MAGNETIC STANDARD.

No. 2575. Fig. 25. ⅓ full size.

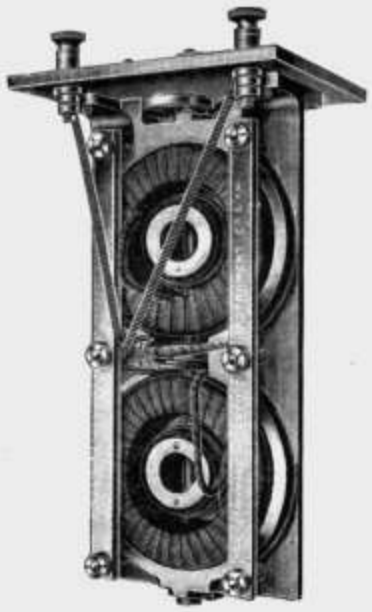

Fig. 25 *a*.

The principal object of the Standard is the calibration of ballistic galvanometers under conditions identical with those under which they are used, thus avoiding the application of corrections for damping, etc.

The general appearance of the instrument in and out of its case is shown in Fig. 25 and 25 *a*. Fig. 26 is a diagram of the connections, in which the various portions of the circuits are denoted by the letters referred to in the text below.

The instrument consists of two fixed coils, *CC*, through which a known direct current flows, and two moving coils, *DD*, which are connected in series with the galvanometer *G* which it is desired to calibrate.

On the case of the instrument the terminals of the fixed coils are marked "Field" and those of the moving coils "Inductor." The moving coils can be rotated suddenly through an angle of 180° by releasing a spring. They will thus cut the lines of magnetic force generated by the fixed coils, causing a deflection of the galvanometer *G*. *B* is an ordinary accumulator cell, *R* a regulating resistance, *A* an accurate ammeter such as most Generating Stations and Laboratories possess.

The total interlinkage of flux is given by $K \times A$, where *A* is the current in amperes through the fixed coils *CC*, and *K* a constant depending on the number of turns in the moving coils, and their exact geometric relation with the fixed coils.

A Statement of Examination from the National Physical Laboratory accompanies each instrument. The following is a copy of such a statement:—

"THE NATIONAL
PHYSICAL LABORATORY.

Statement of Examination of Duddell Magnetic Inductor, No. 4097.
No. 2844 *for the Cambridge Scientific Instrument Co.*

With 10 amperes in the primary coils, when the secondary coils are turned from one extreme position to the other, we find the change in the 'total interlinkage' of flux to be 999,000 line turns.

(Signed) R. T. GLAZEBROOK.
Director.

July 26, 1907.

Reference E. L. 16. 127.
Albert Campbell.

Note:—This sheet contains a statement of results arrived at in the examination of an instrument, and is not a certificate."

It will be observed that although the value of K is not given in the above statement it may be at once deduced from the figures given:

$$K = \frac{999{,}000}{10} = 99{,}900.$$

By adjusting the current through the fixed coils from 0 up to about 10 amperes, the total interlinkage of flux may be varied from 0 up to 10^6.

A contact key K is connected in series with the Ballistic Galvanometer G so that, when adjusting the current through the fixed coils, the variation in that current shall not cause undesired deflections in the galvanometer.

When using the instrument it is advisable to keep the "Inductor" always in series with the Ballistic Galvanometer. Then the deflections obtained with the Ballistic Galvanometer and search coil can be reproduced by means of the standard without altering the circuit in any way. If A be the current through the field required to produce the deflection, then the total interlinkage of flux corresponding to the ballistic deflection is KA.

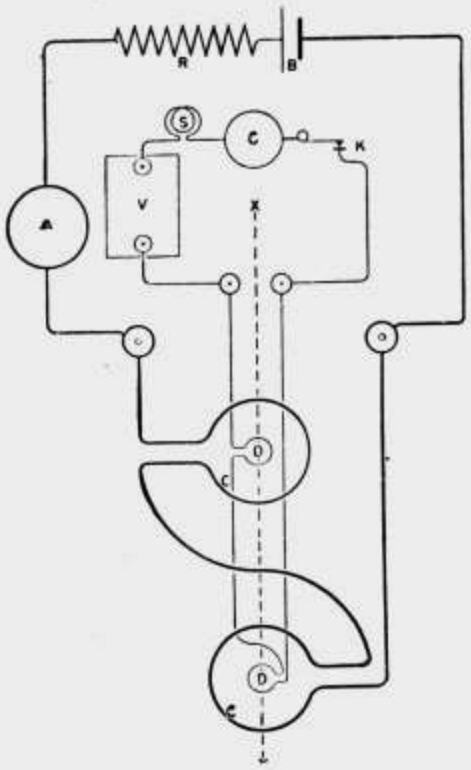

Fig. 26. Diagram of connections of Duddell Magnetic Standard.

ADVANTAGES.

(1) *The coils are wound astatically to eliminate the effects of the stray fields and to prevent varying stray fields from causing an unstable zero.*

(2) *The accuracy of the instrument does not depend on the accuracy of "permanent magnets." Its constant cannot be altered except by an alteration in the geometric relations between the coils, and this alteration could only take place as the result of violent mechanical damage.*

(3) *As there is no necessity for interrupting or reversing the current through the fixed coils, all the troubles that are caused by small variations in the resistance of switch contacts are eliminated. Thus the current in the fixed coils remains constant and tests can be quickly made and repeated.*

(4) *The resistance of the copper wire in the fixed coils is only* 0·075 *ohm, so that any change in their resistance due to change of temperature may be made a very small part of the whole resistance of the field circuit. As the rheostat R can be wound with wire whose temperature coefficient of resistance is low, the change in field current due to heating during an experiment is quite negligible.*

(5) *One accumulator cell is sufficient to energize the field coils, provided it is of sufficient capacity to give a steady current of* 10 *amperes.*

(6) *For many reasons it is convenient to use moving coil galvanometers for ballistic purposes. When working in dynamo rooms or near moving machinery where there is vibration a little damping on the galvanometer greatly facilitates the work. But this damping introduces a troublesome correction if any attempt is made to calibrate the galvanometer with a continuous current. The Duddell Magnetic Standard enables the calibration to be carried out exactly under the working conditions, and further, enables any particular deflection to be reproduced and its value determined without the law of the galvanometer being known.*

For tests where large fields are concerned an instrument of the type of the Grassot Fluxmeter can be used instead of a ballistic galvanometer (see p. 34).

INSTRUCTIONS FOR USE.

Make the external connections as shown in the diagram, Fig. 26. The wire of the field circuit should of course be sufficiently thick to carry 10 amperes without perceptible heating.

The accumulator B should be capable of giving a steady current up to about 10 amperes. The rheostat R should be able to carry 10 amperes without undue heating and should be capable of variation between 0 and 3 ohms, preferably continuously. This condition can be conveniently realized by shunting a low variable resistance by one, also variable, but of high resistance, thus large variation may be made on the low resistance, and finer adjustments on the high resistance shunt. Any accurate ammeter may be used.

Assuming that it is desired to calibrate a ballistic galvanometer over its whole range, first adjust the rheostat R until the current A, read on the ammeter, is $\frac{10^6}{K}$, where K is the constant of the instrument as given by the certificate. This current will correspond to a total interlinkage of flux 10^6.

Rotate the handle, attached to the spindle of the moving coils, on the standard, through 180°, retaining it against the action of the spring by means of the catch.

Ascertain that the ammeter deflection is still steady at the desired figure and also that the ballistic galvanometer is steady at zero, press the key K in the inductor circuit, release the catch on the standard and observe the limit of the throw of the ballistic galvanometer.

From this experiment an idea will be gained of the sensibility of the galvanometer. A suitable series of field currents can now be chosen to cover the required range and the throws observed and recorded in each case.

A curve may now be drawn from the observed results, plotting deflections against total interlinkage of flux (that is to say the number of lines cut × number of turns cutting them × the number of times they are cut).

The value of any particular deflection may be taken from the curve, or actually reproduced by the magnetic standard. To do this, vary the current in the field circuit until the required deflection has been reproduced, and note the current. The total interlinkage of flux will then be given by $K \times A$, where A is the current in amperes and K is the constant of the standard.

This method of calibration gives the ballistic constant of the galvanometer as used for measuring transient currents, or discharges generally.

These are connected by the formula

$$Q = \frac{K.a.d}{R \times 10^8}.$$

Where Q = Integral of current or quantity in coulombs.
K = Constant of the Magnetic Standard.
a = Current through field coils of Magnetic Standard to produce unit deflection.
R = Total resistance of galvanometer circuit during calibration.
d = deflection in Scale divisions.

PRICES.

Catalogue Number		$	Code Word
2575.	**Magnetic Standard as described above in mahogany case complete with National Physical Laboratory Certificate**	**128.00**	*Lovelock*
2577.	Rheostat, for regulating the field current . . .	**18.50**	*Lonish*
2578.	Laboratory type Ammeter, with uniformly divided scale, reading from 0 to 12 amps., with internal shunt .	**91.00**	*Lordlike*
2579.	Spring Key	**5.50**	*Lossless*

GALVANOMETER LAMP AND SCALE.

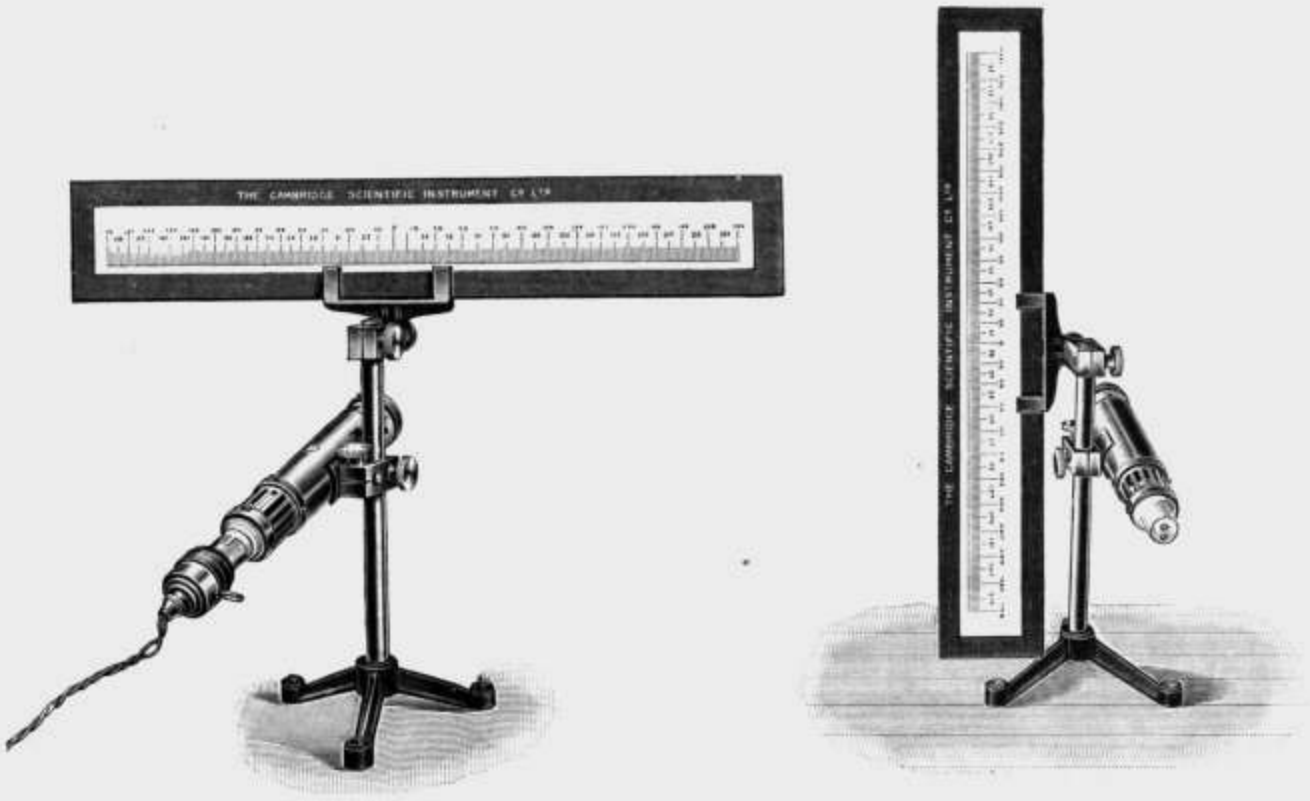

No. 2585. Fig. 27. ⅓ full size.

A Nernst lamp is mounted in a brass tube carrying a lens. Either the image of the filament or that of a wire stretched across the lens is projected from the galvanometer mirror on to the scale; an extremely bright image being obtained by this means. The scale is 50 cms. long, is translucent, divided in millimetres and figured. It may be used either horizontally or vertically. Unless otherwise ordered the lamp is supplied for use on a 100 volt circuit.

The tripod base is arranged with holes through the feet so that it may be screwed to a wall or table.

PRICES.

Catalogue Number		$	Code Word
2585.	**Lamp and scale (see Fig. 27) on brass stand** . .	**24.00**	*Martlet*
2586.	Price of lamp alone on brass stand . . . . . [This is most useful when it is desired to fix the lamp away from the scale.]	**18.20**	*Martyrize*
2587.	2 yard length of flexible lead with B. C. holder and plug adaptor	**1.60**	*Loudless*

GALVANOMETER TELESCOPE AND SCALE.

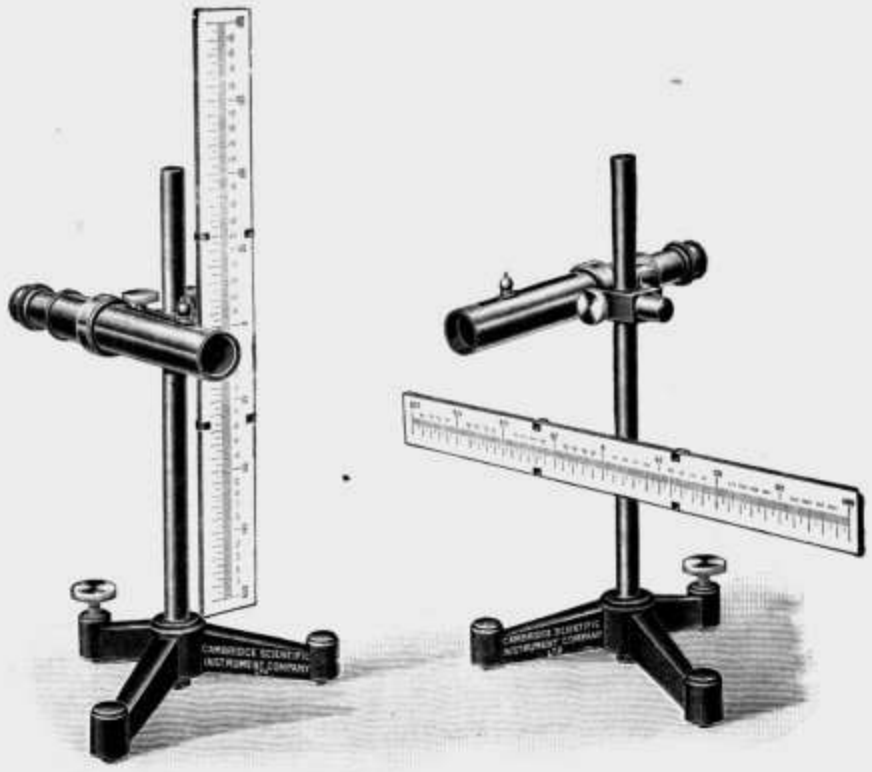

No. 2590. Fig. 28. ⅛ full size.

The scale is 40 cm. long, divided in millimetres with looking-glass figures. It can be placed either horizontally or vertically, a fine adjustment being obtained by means of the foot screw, and can also be slid lengthwise in its clip. The telescope has a magnification of about four, it can be tilted and clamped at any inclination. Both telescope and scale can be swivelled round or adjusted in height upon the vertical stem.

PRICE.

Catalogue Number		$	Code Word
2590.	Telescope and scale with brass stand	**41.00**	*Maintop*

BOYS' GEOMETRIC TRIPOD STANDS.

No. 2595. Fig. 29. $\frac{1}{16}$ full size.

These stands, designed by Prof. C. V. Boys, are especially adapted for supporting pieces of apparatus, such as galvanometers, lamps, etc.

By their means, a stand of any desired height may be made, each tripod making geometric contact with the one immediately below it.

A triangular groove is formed on the upper surface of the tripods into which the levelling screws of an instrument may be placed.

The stands are supplied in two sizes:

Small Size: Distance from centre of tripod to centres of feet 75 mm.

A set of 1 dozen consists of:

9 stands 50 mm. high,
2 stands 25 mm. high,
and 1 stand 25 mm. high, to which a metal table 170 mm. in diameter is fixed.

PRICES.

Catalogue Number		$	Code Word
2595.	In Iron, per set of 1 doz.	**5.70**	*Marigold*
2596.	In Brass, per set of 1 doz.	**17.00**	*Makebate*

Large Size: Distance from centre of tripod to centres of feet 175 mm.

A set of 1 dozen consists of:

9 stands 76 mm. high,
2 stands 36 mm. high,
and 1 stand 36 mm. high, to which a wooden table 33 cm. square is fixed.

PRICES.

Catalogue Number		$	Code Word
2600.	In Iron, per set of 1 doz.	**21.50**	*Malapert*
2601.	In Brass, per set of 1 doz.	**55.00**	*Millhorse*

GALVANOMETER MIRRORS AND LENSES.

Note. When a concave mirror is fixed to the moving system of a galvanometer the scale distance = twice the focal length of the mirror.

When a plane mirror is used in place of a concave one and a lens is fixed in front of it the scale distance = the focal length of the lens.

CONCAVE MIRRORS.

Catalogue Number	Diameter	Focal Length	Scale Distance	Price $	Code Word
2605.	10 mm.	500 mm.	1000 mm.	**2.00**	*Malice*

PLANE MIRRORS.

Catalogue Number·	Breadth	Depth	Thickness	Suitable for	Price $	Code Word
2606.	4 mm.	5 mm.	0·2 mm.	Broca Galvanometer	**1.60**	*Malkin*
2607.	3 „	5 „	0·2 „	Thermo-galvanometer	**1.60**	*Mallard*
2608.	5 „	6 „	0·2 „	Dolezalek Electrometer	**1.60**	*Malthorse*

LENSES.

Catalogue Number	Lens	Diameter	Focal Length	Suitable for	Price $	Code Word
2609.	Plano-convex	28 mm.	1000 mm.	Broca Galvanometer or Thermo-galvanometer	**4.00**	*Mawmet*
2610.	Achromatic	25 „	150 „	Telescope and Scale	**2.00**	*Mammock*
2611.	„	35 „	130 „	Lamp and Scale	**2.00**	*Mammonis*

GALVANOMETER SUSPENSIONS.

PHOSPHOR-BRONZE STRIP.

Catalogue Number	Width in mm. approx.	Thickness in mm. approx.	Price per metre $	Code Word
2620.	0·58	0·032	**2.00**	*Manfulness*
2621.	0·48	0·030	**2.00**	*Manhood*
2622.	0·32	0·015	**2.00**	*Manikin*
2623.	0·23	0·016	**2.00**	*Manlike*
2624.	0·14	0·011	**2.00**	*Manless*

SILVER STRIP.

2625.	0·160	·0085	**2.00**	*Manchet*

PLATINUM-SILVER STRIP.

Catalogue Number	Width in mm.	Thickness in mm.	For use with	Price per metre $	Code Word
2626.	0·14	0·0085	Ayrton-Perry-Duddell's Twisted Strip Ammeter	**4.00**	*Mancipate*

PLATINUM-SILVER WIRE.

Catalogue Number	Diameter in mm.	For use with	Price per metre $	Code Word
2627.	0·030	Ayrton-Perry-Duddell's Twisted Strip Ammeter	**4.00**	*Mandate*

QUARTZ FIBRES.

These fibres are made by the method described by Mr C. V. Boys, F.R.S., and have the great advantage of being apparently perfectly elastic. They are also exceedingly strong, the breaking strength of quartz (when drawn fine) exceeding that of steel. They are supplied on frames each containing six or more fibres.

Catalogue Number		Length	Approx. diameter	Prices $	Code Word
2628.	6 fibres	16 cms.	0·003 to 0·02 mm.	**4.00**	*Mandilion*
2629.	6 ,,	30 ,,	,, ,, ,,	**5.00**	*Manginess*
2630.	6 ,,	40 ,,	0·008 to 0·03 ,,	**6.00**	*Mangler*
2631.	6 ,,	60 ,,	,, ,, ,,	**10.00**	*Manicon*